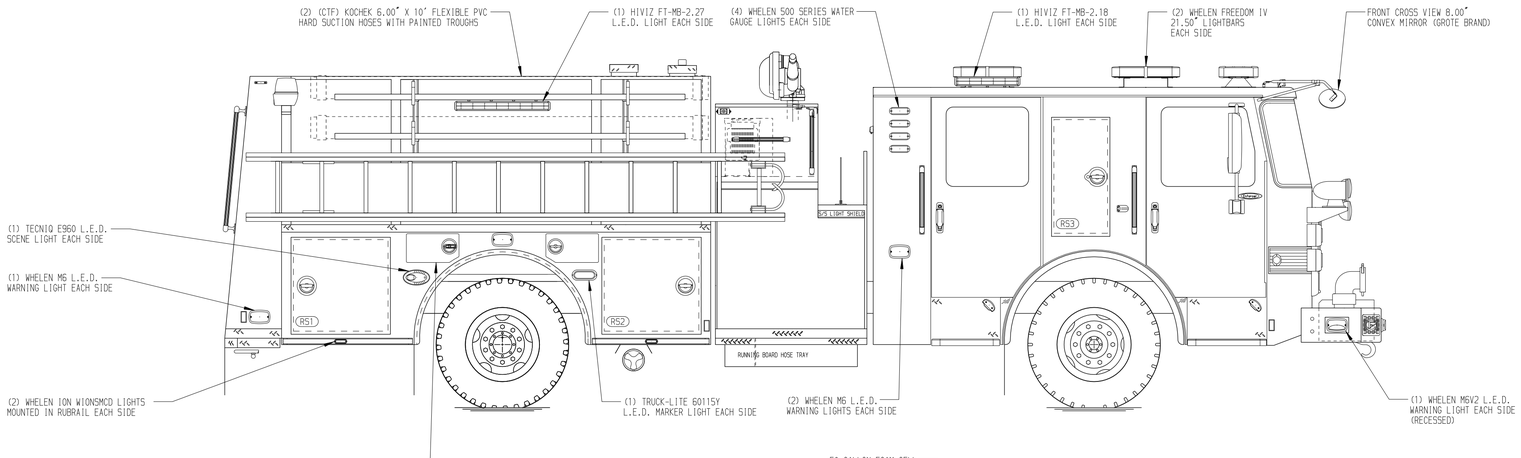

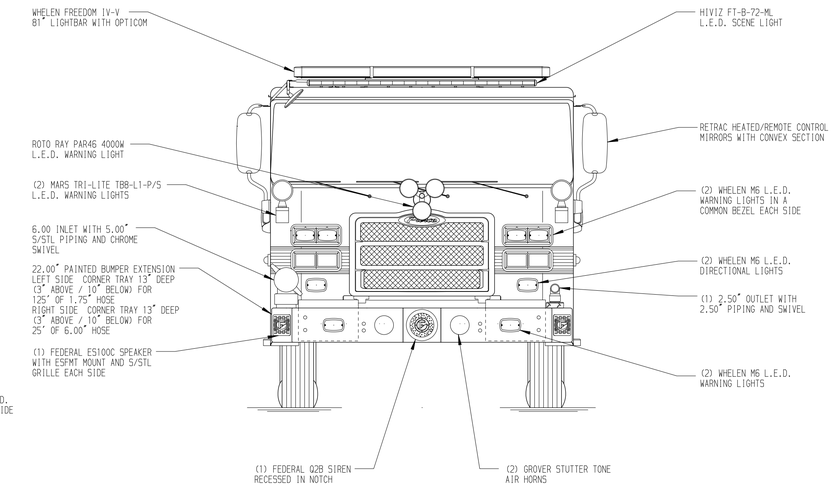

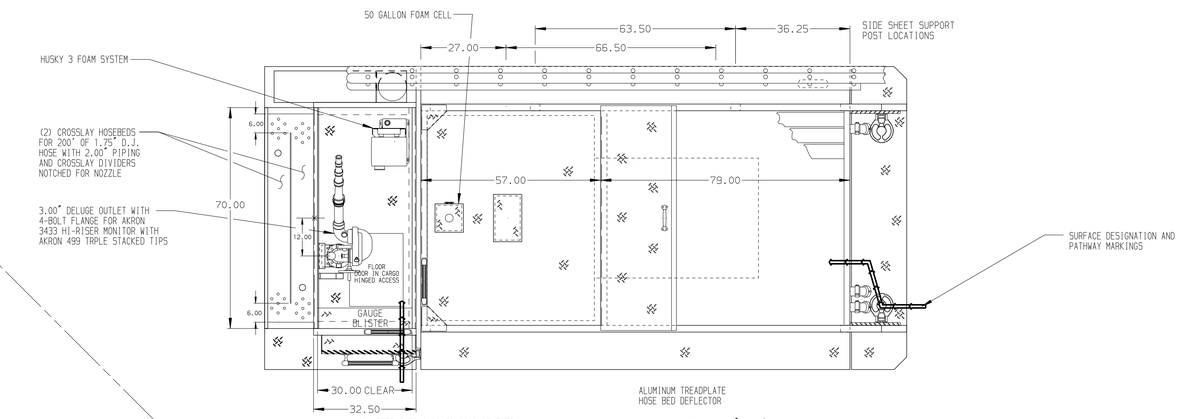

HOSEBED CAPACITIES

1. 300' OF 1.75" D.J. POLY HOSE
2. 400' OF 2.00" D.J. POLY HOSE
3. 1000' OF 4.00" D.J. POLY HOSE
4. 500' OF 3.00" D.J. POLY HOSE
5. 250' OF 2.50" D.J. POLY HOSE

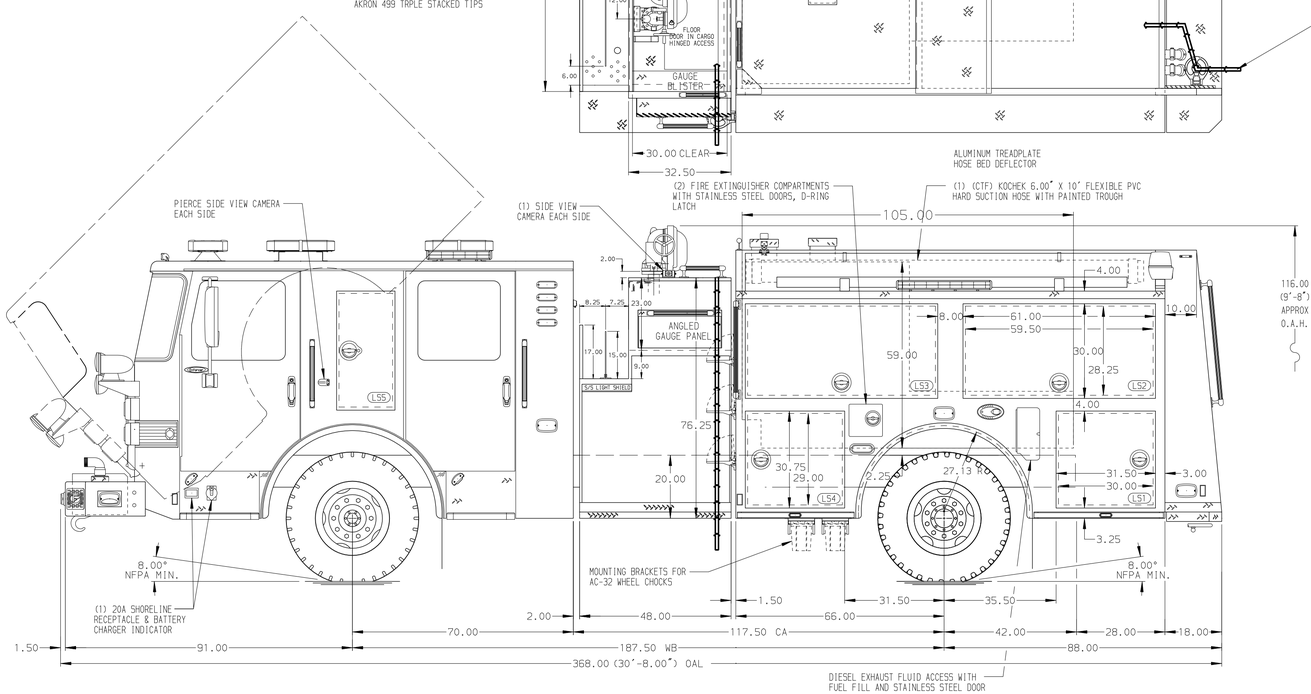

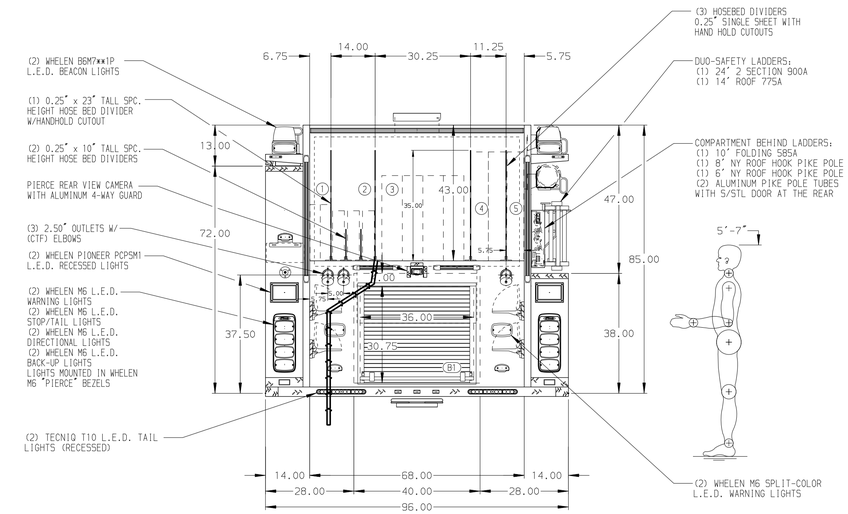

ALUMINUM BODY

MAXIMUM O.A.L. 368"

MAXIMUM O.A.H. 116"

SIDE ROLL AND FRONTAL IMPACT PROTECTION

NOTE

DIMENSIONS SHOWN ARE APPROXIMATE AND ARE SUBJECT TO MINOR DEVIATIONS AS MAY OCCUR OR BE NECESSARY IN CONSTRUCTION.
MINOR DETAILS NOT SHOWN.

1. ONSPOT AUTOMATIC TIRE CHAINS TO BE PROVIDED AT REAR
2. BATTERY CHARGER LOCATED IN COMPARTMENT LS3
3. BATTERY CHARGER INDICATOR LOCATED ON DRIVER'S SEAT RISER
4. ALUMINUM PEGBOARD WITH TRACKS ON THE REAR WALL OF COMPARTMENTS LS2,LS3
5. AIR INLET WITH DISCONNECT COUPLING LOCATED ON D.S. PUMP PANEL
6. AIR OUTLET WITH SHUT OFF VALVE LOCATED ON D.S. PUMP PANEL
7. ALUMINUM TREADPLATE ON REAR 24.00" OF CAB ROOF
8. BUZZER WARNING BUTTONS ON INNER SURFACE OF BEAVERTAILS
9. ONE ADJUSTABLE FULL WIDTH/DEPTH SHELF IN COMPARTMENTS LS2,LS4,RS2
10. ONE 15/20A, 120V DUPLEX RECEPTACLE LOCATED IN COMPARTMENT RS2 AND R.S. EMS COMPARTMENT
11. ONE ADJUSTABLE SLIDE-OUT TRAY LOCATED IN COMPARTMENT B1
12. ONE BOLT IN PARTITION LOCATED IN COMPARTMENTS LS1/B1 & RS1/B1

REV	DATE	BY	CH
V	05MAY20	JAJ	PPE
V	16APR20	JWO	PPE
V	03APR20	JWO	CDK
V	03MAR20	CDU	NPE

CHASSIS DATA
MAKE PIERCE
MODEL ENFORCER

Pierce MANUFACTURING INC.

TITLE 1500-D-750P W/50G FOAM WATER, 136" LIFT-UP DS, LOW PS (2)XLAYS, DELUGE, GENERATOR, LDRS ON BODY

FOR CITIZENS FIRE COMPANY INC CHARLES TOWN, WEST VIRGINIA

DWG NO. 34846AD

JOB NO.	34846
SCALE 1:24	DATE
DRAWN BY JWO	24FEB20
CHECKED BY CDU	24FEB20
SHEET SIZE D	SHEET NO. 1 OF 1

View File Created 06-MAY-2020 11:13:23