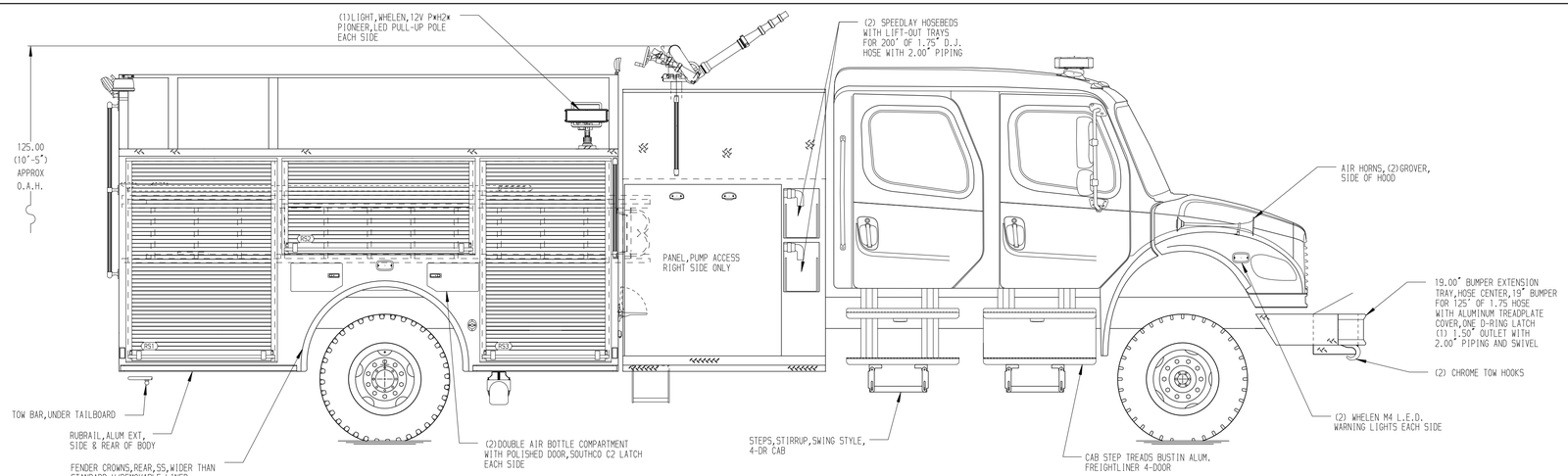

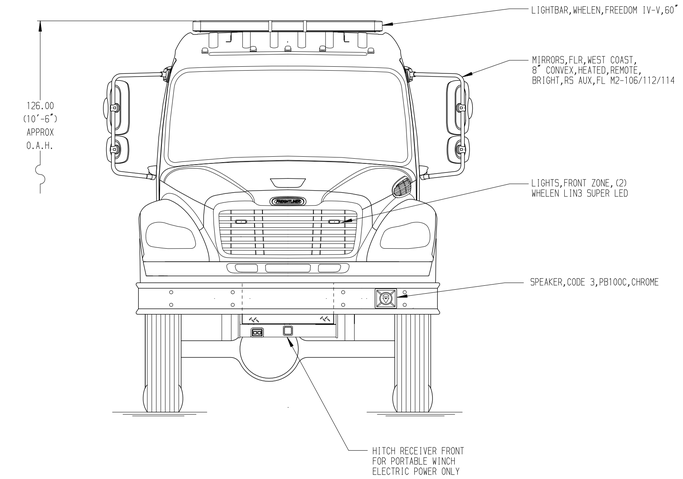

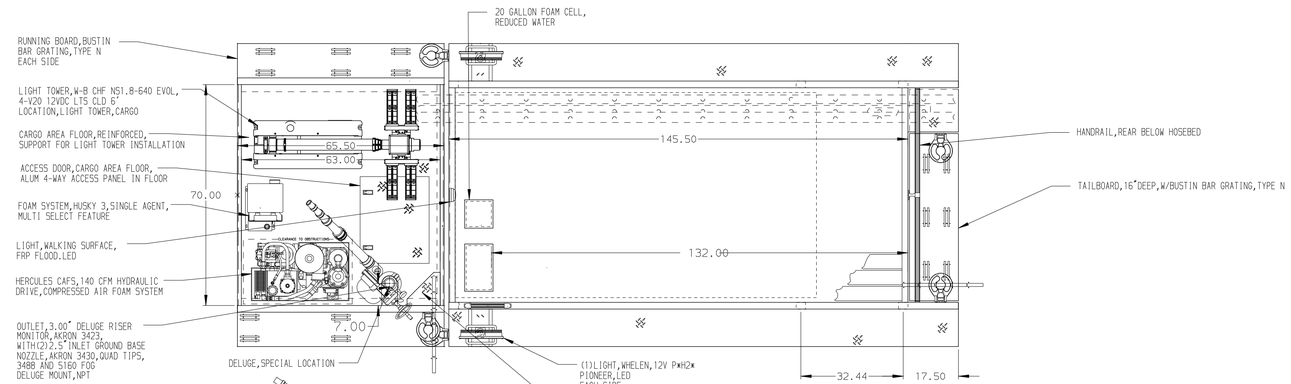

HOSEBED CAPACITIES
1. 1000' OF 5.00" D.J. POLY HOSE
2. 600' OF 3.00" D.J. POLY HOSE
3. 200' OF 1.75" D.J. POLY HOSE

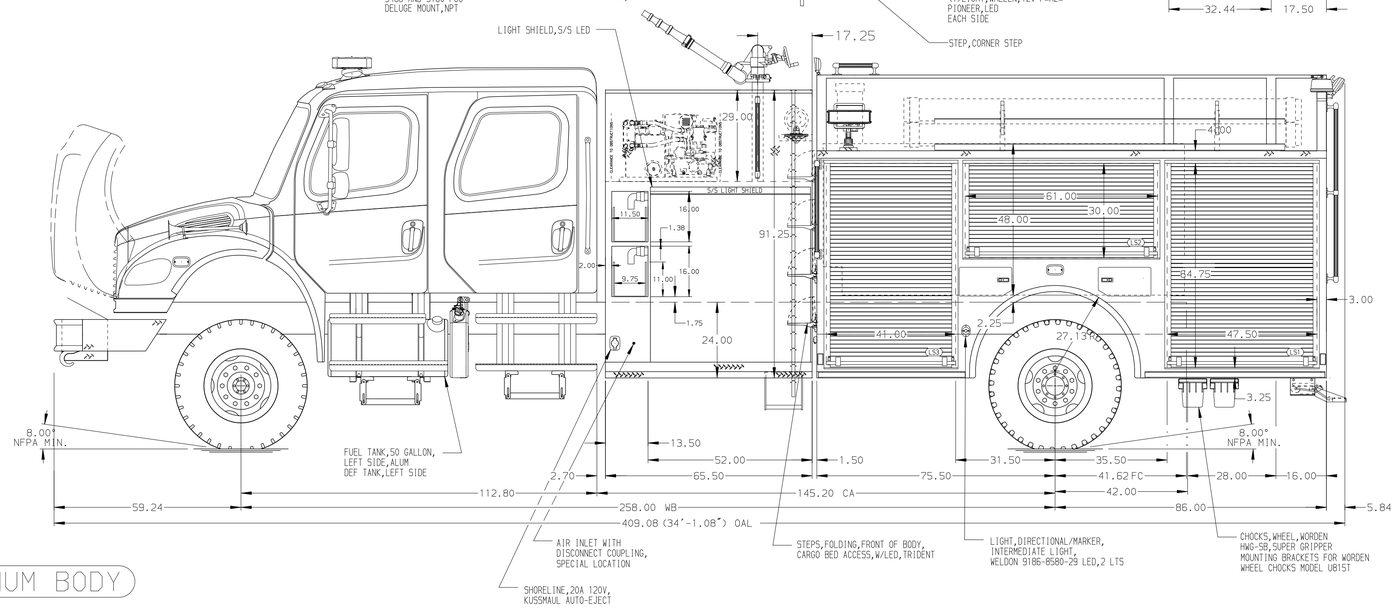

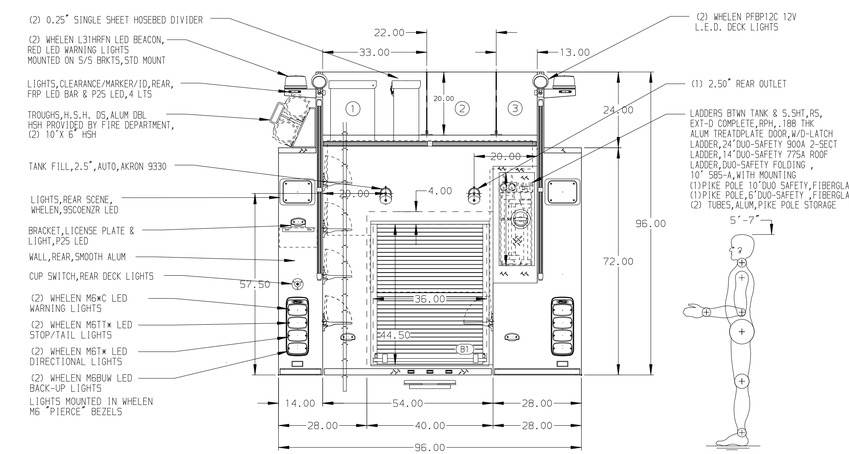

ALUMINUM BODY

NOTE
DIMENSIONS SHOWN ARE APPROXIMATE AND ARE SUBJECT TO MINOR DEVIATIONS AS MAY OCCUR OR BE NECESSARY IN CONSTRUCTION.
MINOR DETAILS NOT SHOWN.

REV	DATE	BY	CH
3	22SEP20	RHU	GSC
2	14AUG20	RHU	GSC
1	10JUN20	JLA	RWI

CHASSIS DATA
MAKE: FL
MODEL: M2-106 4X4

Pierce MANUFACTURING INC.

TITLE: 1500-D-980P W/ 20 FOAM,161"BODY,LS&RS FULL HEIGHT 52"SIDE CONTROL,(2)1.5"SPEEDLAYS W/POLY TRAYS
FOR: WRANGELL VOLUNTEER FIRE DEPARTMENT WRANGELL, ALASKA
DWG NO.: 34841AD

JOB NO.	34841
SCALE	1:24
DATE	
DRAWN BY	JLA 12MAY20
CHECKED BY	RWI 14MAY20
SHEET SIZE	D
SHEET NO.	1 OF 1

View File Created 24-SEP-2020 06:51:36