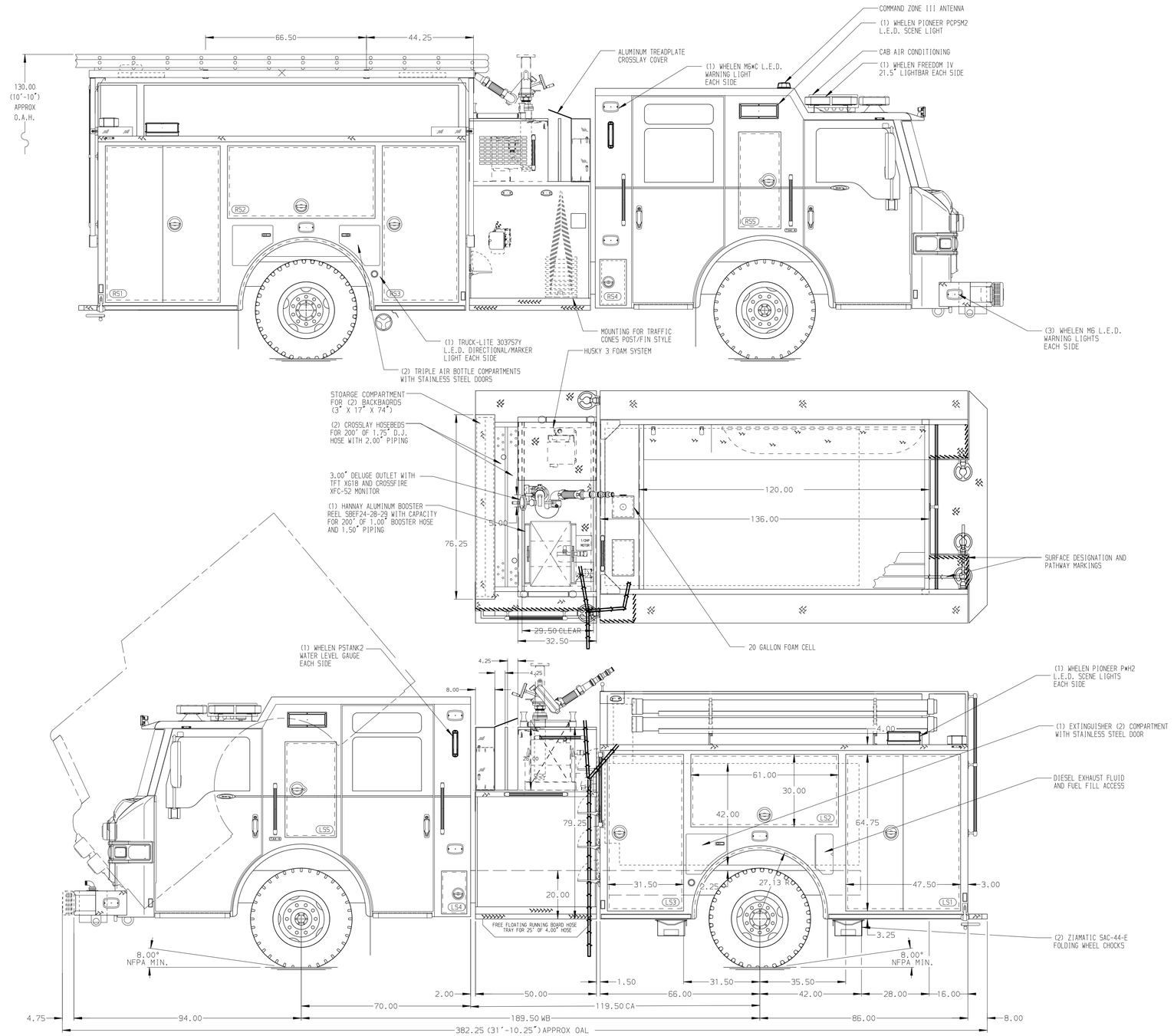

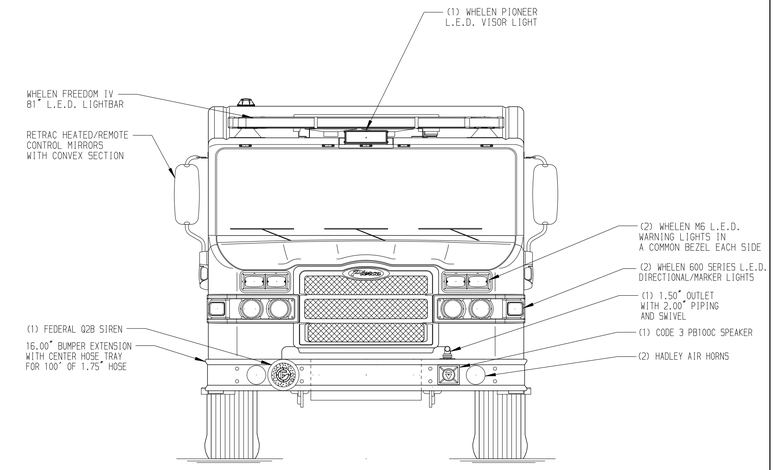

HOSEBED CAPACITIES

1. 300' OF 1.75" D.J. HOSE (TOP)
   500' OF 2.50" D.J. HOSE (BOTTOM)
2. 600' OF 2.50" OF D.J. HOSE
3. 1000' OF 5.00"

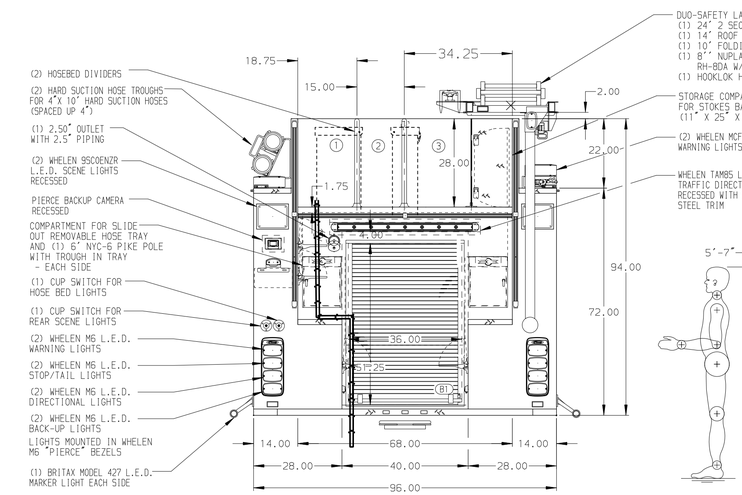

ALUMINUM BODY

SIDE ROLL AND FRONTAL IMPACT PROTECTION

NOTE

DIMENSIONS SHOWN ARE APPROXIMATE AND ARE SUBJECT TO MINOR DEVIATIONS AS MAY OCCUR OR BE NECESSARY IN CONSTRUCTION.
MINOR DETAILS NOT SHOWN.

1. KUSSMAUL BATTERY CHARGER LOCATED IN CAB
2. DUAL L.E.D. LIGHT STRIPS LOCATED IN HOSE BED
3. REVERSED HINGED DOOR ON COMPARTMENT LS3
4. ONE FULL WIDTH/DEPTH ADJUSTABLE SHELF IN COMPARTMENTS LS2 AND B1; TWO IN LS1 AND RS1, THREE IN LS3 AND RS3
5. ONE FLOOR MOUNTED SLIDE-OUT TRAY IN COMPARTMENT RS1
6. SWING-OUT TOOL BOARD WITH PEGBOARD PATTERN IN COMPARTMENT RS2
7. ALUMINUM PEGBOARD ON THE BACK WALL OF COMPARTMENT LS3
8. AIR INLET WITH KUSSMAUL AIR EJECT LOCATED IN DS CAB STEP WELL
9. BATTERY CHARGER INDICTOR LOCATED ON DRIVER'S SEAT
10. KUSSMAUL AUTO EJECT SHORELINE LOCATED IN THE DS STEP WELL
11. SUB FEED BREAKER BOX LOCATED IN THE CAB
12. AIR BAG RACK IN COMPARTMENT LS1
13. 120V DUPLEX RECEPTACLE LOCATED IN COMPARTMENT B1

REV	DATE	BY	CH
2	22JUN20	SHD	PJP
1	21MAY20	LME	PJP

CHASSIS DATA	
MAKE	PIERCE
MODEL	VELOCITY FR
DWG NO.	34832AD

Pierce MANUFACTURING INC.

TITLE	1500-D-770P, 750G WATER W/20G FOAM CELL, 152" BODY FDLER, (2) XLAYS, (1) DEADLAY, DELUGE, HUSKY 3, HLR
FOR	GLADSTONE FIRE DEPARTMENT GLADSTONE, OREGON

JOB NO.	34832
SCALE	1:24
DATE	
DRAWN BY	LME
DATE	04MAR20
CHECKED BY	WKL
DATE	5MAR20
SHEET SIZE	D
SHEET NO.	1 OF 1

View File Created 07-JUL-2020 13:15:28