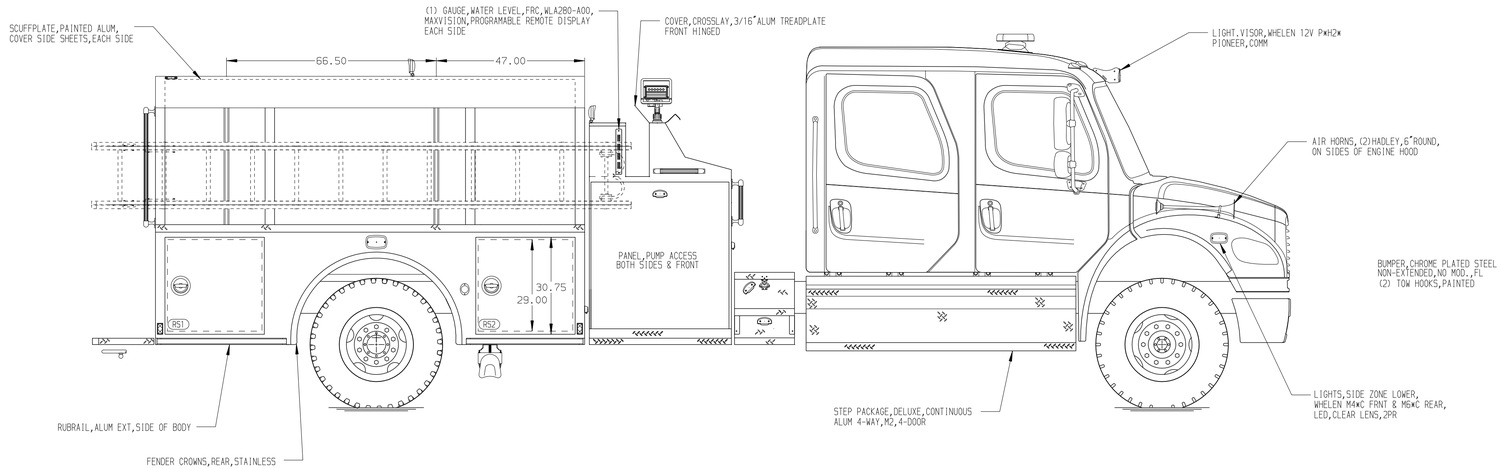


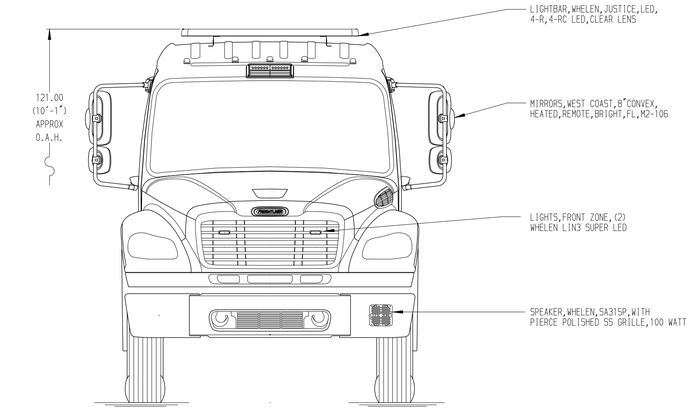


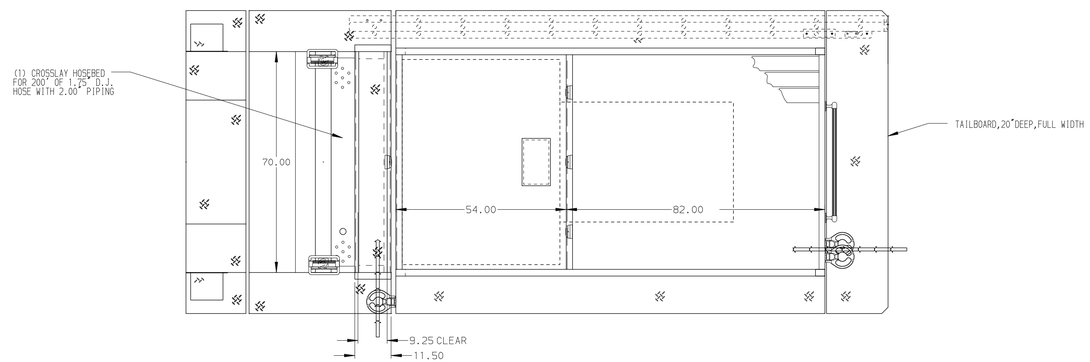


HOSEBED CAPACITIES
1. 600' OF 5.00" D.J. HOSE
2. OPEN (WALKWAY)
3. 600' OF 3.00" D.J. HOSE

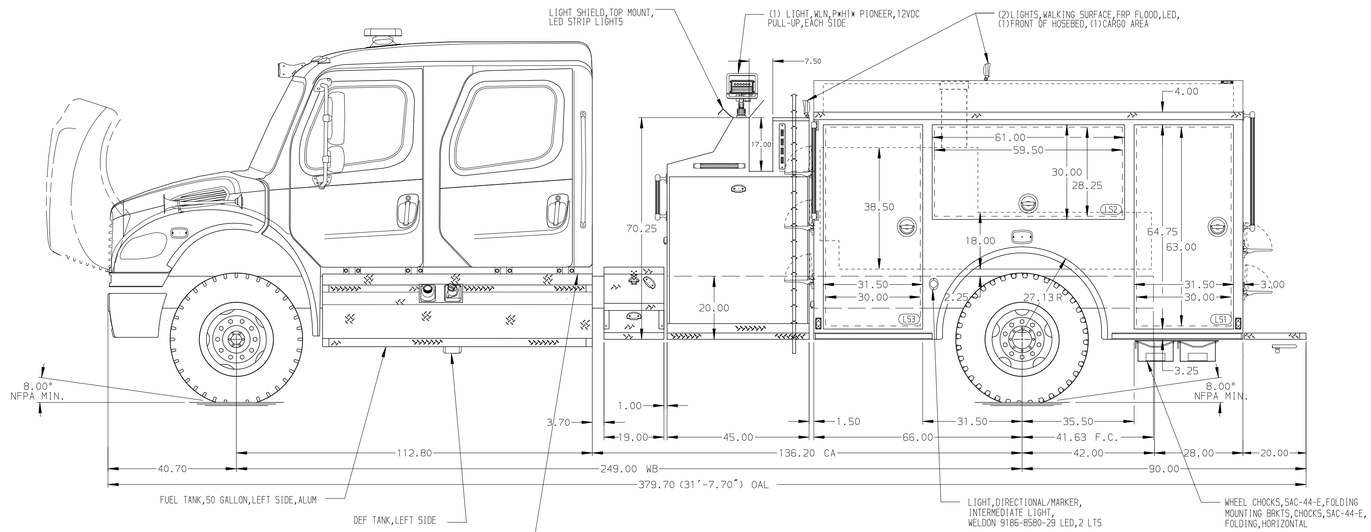


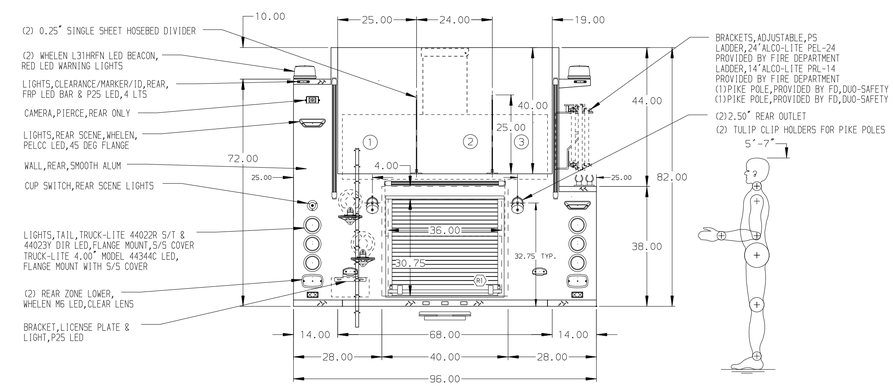


ALUMINUM BODY

NOTE

DIMENSIONS SHOWN ARE APPROXIMATE AND ARE SUBJECT TO MINOR DEVIATIONS AS MAY OCCUR OR BE NECESSARY IN CONSTRUCTION.
MINOR DETAILS NOT SHOWN.

| REV | DATE | BY | CH |
|---|---|---|---|
| 3 | 21SEP20 | JLA | CAG |
| 2 | 19AUG20 | JLA | CAG |
| 1 | 04JUN20 | CRH | RWI |

CHASSIS DATA
MAKE: FL
MODEL: M2-106

**Pierce MANUFACTURING INC.**

TITLE: 1250-D-500P,136"BODY,LS FULL HGHT FRT&RR,RS LOW, 45"TOP MOUNT W/19 WALKWAY,(1)1.5"CROSSLAY
FOR: VOLUSIA COUNTY FIRE DEPARTMENT DELAND,FLORIDA
DWG NO.: 34801AD

| | |
|---|---|
| JOB NO. | 34801 |
| SCALE | 1:24 |
| DATE | |
| DRAWN BY | CRH |
| DATE | 06APR20 |
| CHECKED BY | RWI |
| DATE | 7MAY20 |
| SHEET SIZE | D |
| SHEET NO. | 1 OF 1 |

View File Created 22-SEP-2020 12:14:51