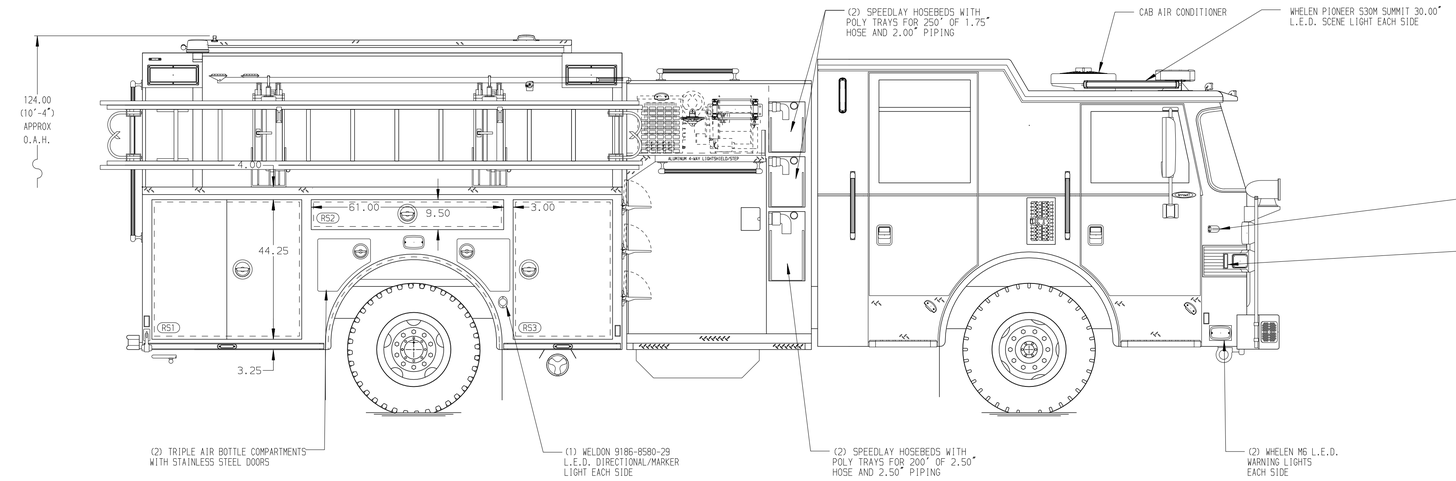

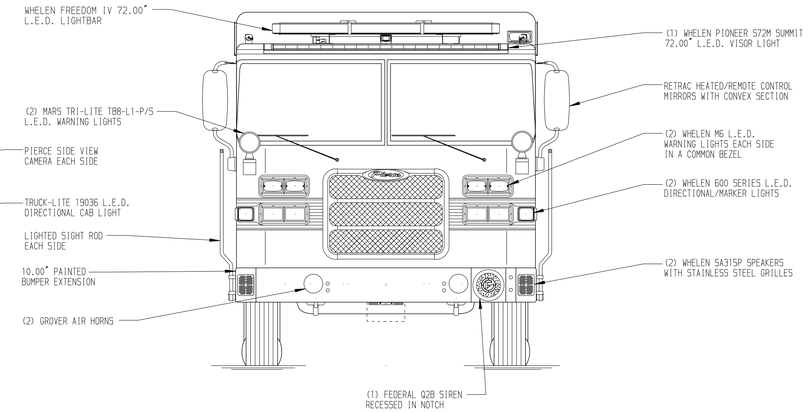

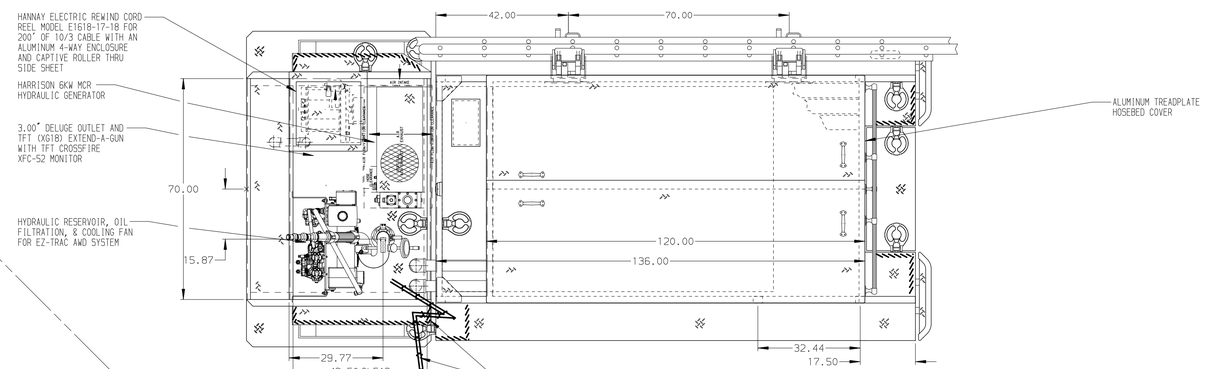

HOSEBED CAPACITIES

1. 250' OF 2.50" D.J.POLY HOSE
2. 250' OF 2.50" D.J.POLY HOSE
3. 500' OF 3.00" D.J.POLY HOSE
4. 2150' OF 5.00" D.J.POLY HOSE

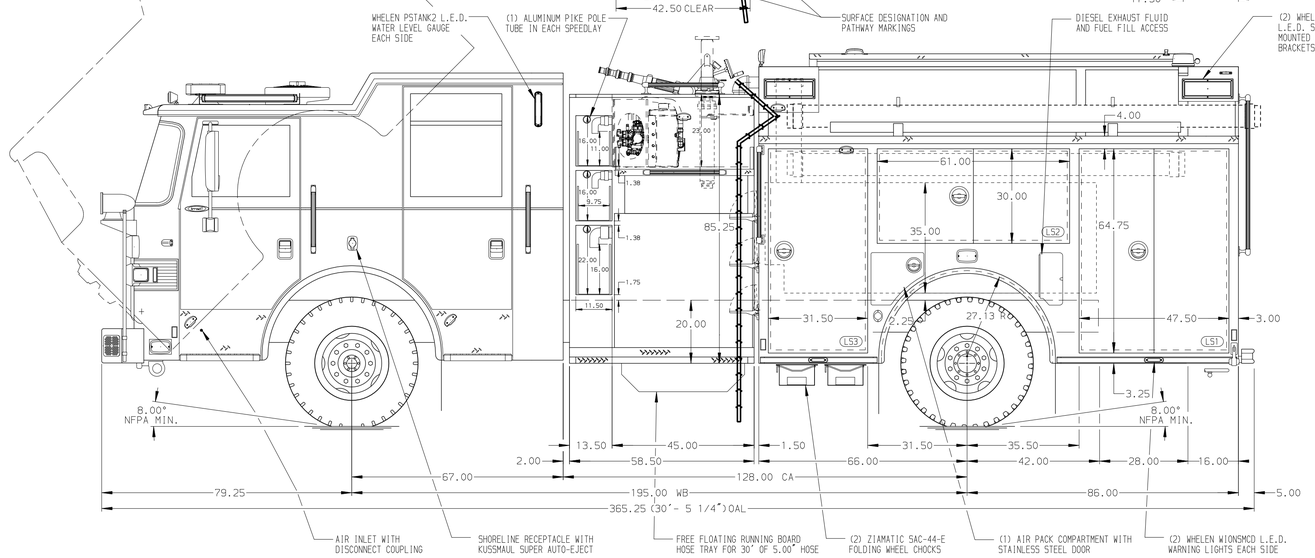

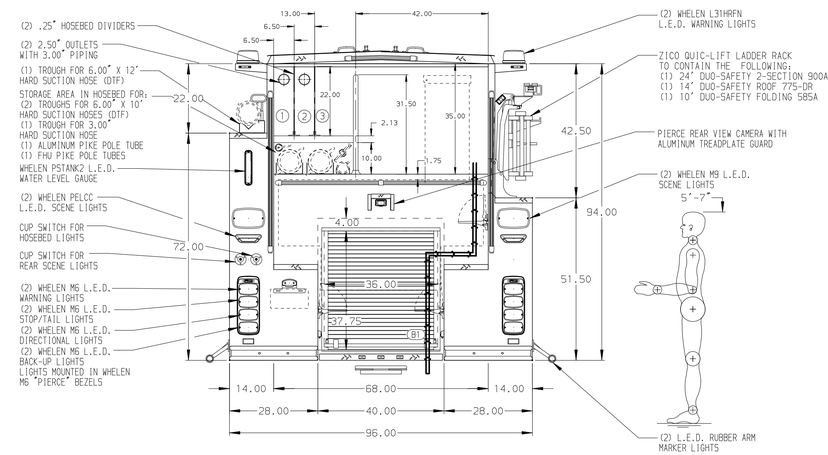

STAINLESS STEEL BODY

NOTE

DIMENSIONS SHOWN ARE APPROXIMATE AND ARE SUBJECT TO MINOR DEVIATIONS AS MAY OCCUR OR BE NECESSARY IN CONSTRUCTION.
MINOR DETAILS NOT SHOWN.

1. BATTERY CHARGER/COMPRESSOR LOCATED IN COMPARTMENT LS3
2. BATTERY CHARGE INDICATOR LOCATED NEAR DRIVER'S SEAT RISER WITH BRACKET
3. DUAL L.E.D. LIGHT STRIPS LOCATED IN HOSE BED
4. REVERSED HINGED DOOR ON COMPARTMENT LS3
5. BRUSHED STAINLESS STEEL SCUFFPLATE INSIDE EACH BODY COMPARTMENT DOORS
6. ONE FULL WIDTH/DEPTH ADJUSTABLE SHELF IN COMPARTMENT LS3; TWO IN RS1 AND RS3; THREE IN LS1
7. TWO ADJUSTABLE SLIDE-OUT TRAYS IN COMPARTMENT LS3
8. ONE FLOOR MOUNTED SLIDE-OUT TRAY IN COMPARTMENT B1
9. SWING-OUT TOOL BOARD WITH PEGBOARD PATTERN IN COMPARTMENT LS2
10. PARTITION BETWEEN COMPARTMENTS LS1/B1 AND RS1/B1
11. CIRCUIT BREAKER PANEL IN COMPARTMENT LS3

REV	DATE	BY	CH
7	23JUL20	KLE	CSH
6	02JUN20	KLE	CSH
5	24APR20	KLE	CSH
4	13MAR20	CDU	NPE

CHASSIS DATA
MAKE: PIERCE
MODEL: ARROW XT

Pierce MANUFACTURING INC.

TITLE: 1500-D-750P, 152" BODY, SIDE CONTROL, SPEEDLAYS DELUGE, EZ TRAC SYSTEM, GENERATOR, ZICO LADDER RACK
FOR: ESSEX FIRE DEPARTMENT, ESSEX JUNCTION, VERMONT
DWG NO. 34781AD

JOB NO.	34781
SCALE	1:24
DATE	
DRAWN BY	KLE
DATE	09MAR20
CHECKED BY	CDU
DATE	10MAR20
SHEET SIZE	D
SHEET NO.	1 OF 1

View File Created 27-JUL-2020 06:34:33