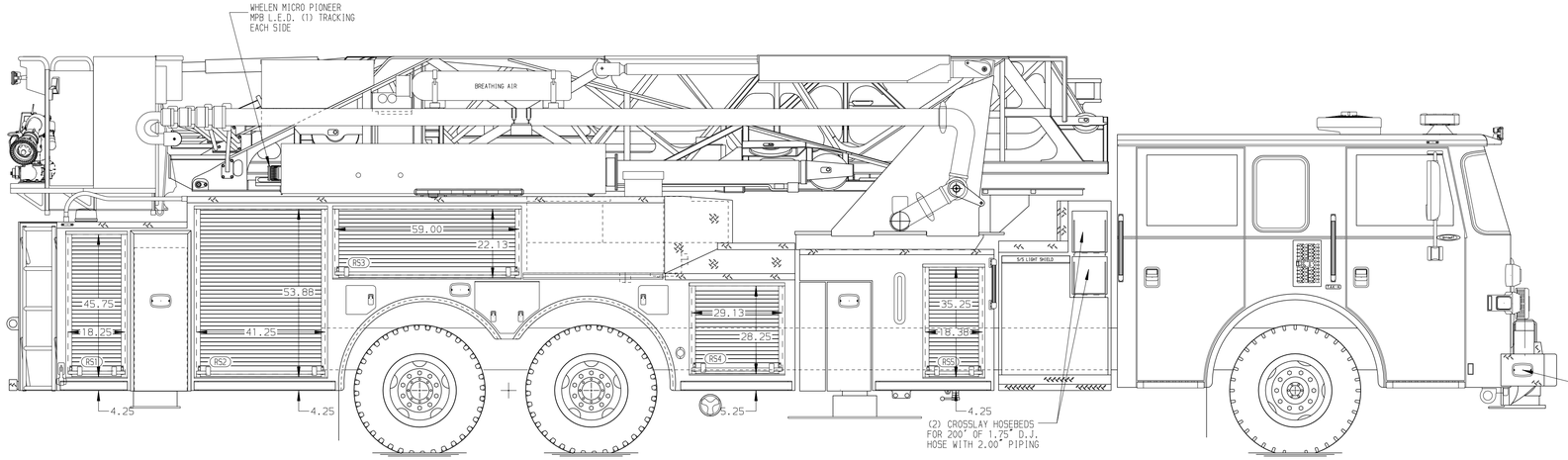

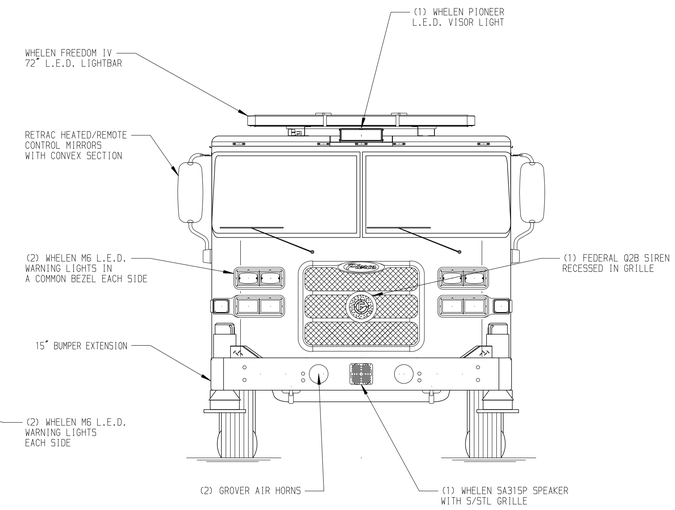

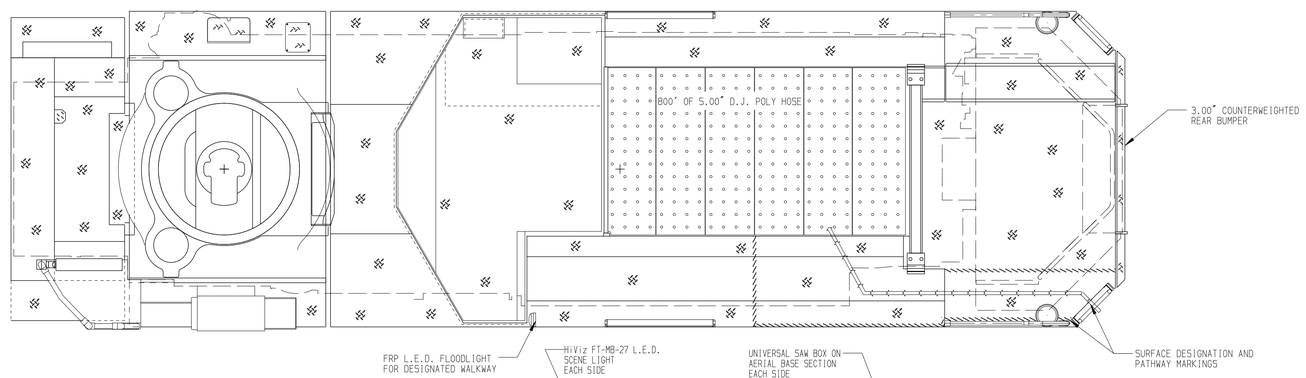

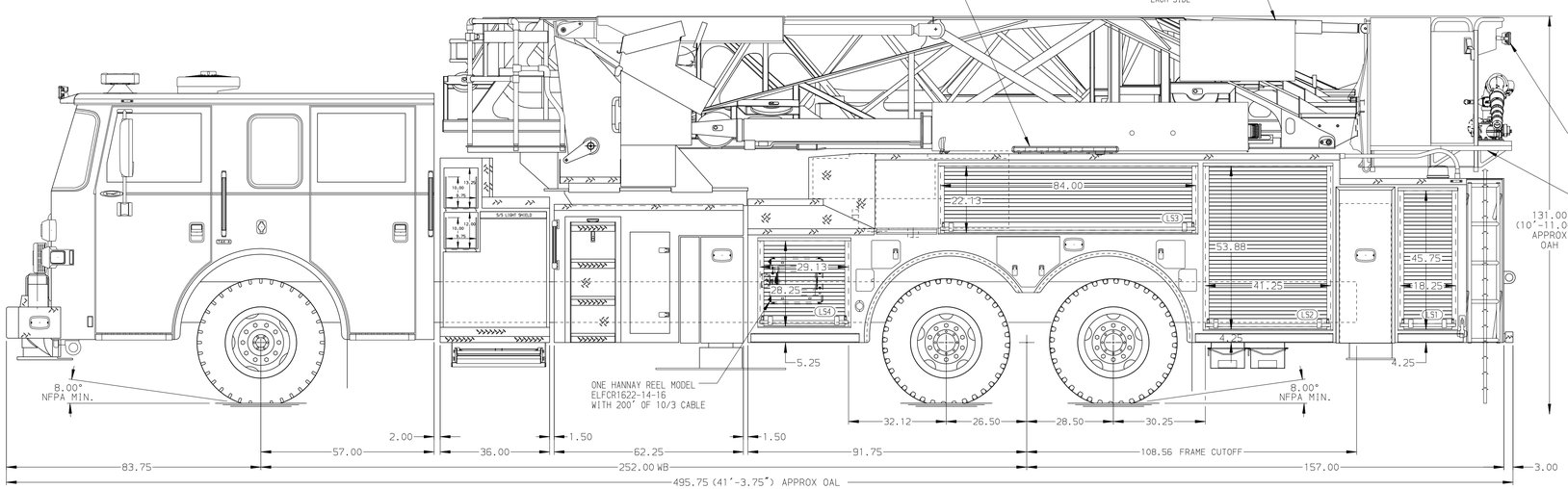

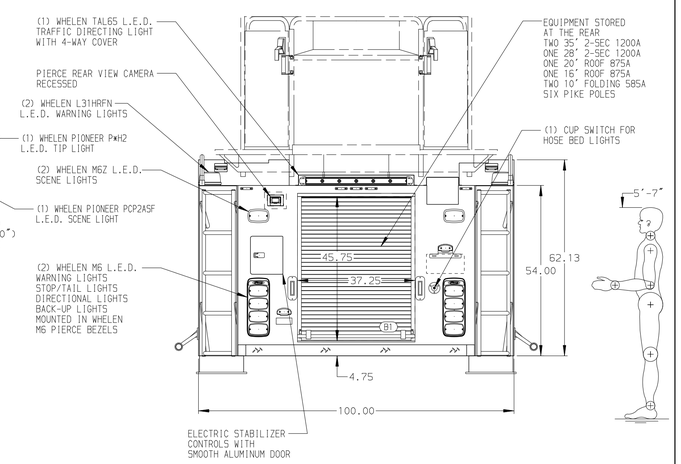

ALUMINUM BODY

NOTE

DIMENSIONS SHOWN ARE APPROXIMATE AND ARE SUBJECT TO MINOR DEVIATIONS AS MAY OCCUR OR BE NECESSARY IN CONSTRUCTION.
MINOR DETAILS NOT SHOWN.

1. SHORELINE RECEPTACLE WITH KUSSMAUL SUPER AUTO-EJECT LOCATED ON DRIVER SIDE OF THE CAB
2. AIR INLET WITH DISCONNECT COUPLING IN THE DRIVER SIDE STEPWELL
3. BATTERY CHARGER LOCATED BEHIND DRIVER'S SEAT
4. BATTERY CHARGE INDICATOR LOCATED NEAR DRIVER SEAT RISER WITH BRACKET
5. NINE ADJUSTABLE SHELVES IN COMPARTMENTS PER SHOP ORDER
6. TWO FLOOR MOUNTED SLIDE-OUT TRAYS IN COMPARTMENTS PER SHOP ORDER
7. NON-RAISED AERIAL PEDESTAL
8. 3-in-1 LYFECOMBO BRACKETS AT AERIAL BASKET
9. HARRISON 6KW MID GENERATOR LOCATED IN COMPARTMENT PER SHOP ORDER
10. CIRCUIT BREAKER PANEL LOCATED IN COMPARTMENT PER SHOP ORDER
11. AC POWER TO TIP
12. 2-WAY INTERCOM SYSTEM BETWEEN AERIAL TIP AND TURNTABLE

REV	DATE	BY	CH
3	18MAY20	LWE	DTS
2	01APR20	TKA	DTS

CHASSIS DATA
MAKE: PIERCE
MODEL: ARROW XT

Pierce MANUFACTURING INC.

TITLE: 100' ASCENDANT AERIAL PLATFORM AND BODY ASSEMBLY
300 GALLON WATER TANK

FOR: NEW CASTLE FIRE DEPARTMENT
NEW CASTLE, IN

DWG NO. 34774AD

JOB NO.	34774
SCALE 1:24	DATE
DRAWN BY LWE	06FEB20
CHECKED BY NDA	10FEB20
SHEET SIZE D	SHEET NO. 1 OF 1

View File Created 18-MAY-2020 14:23:42