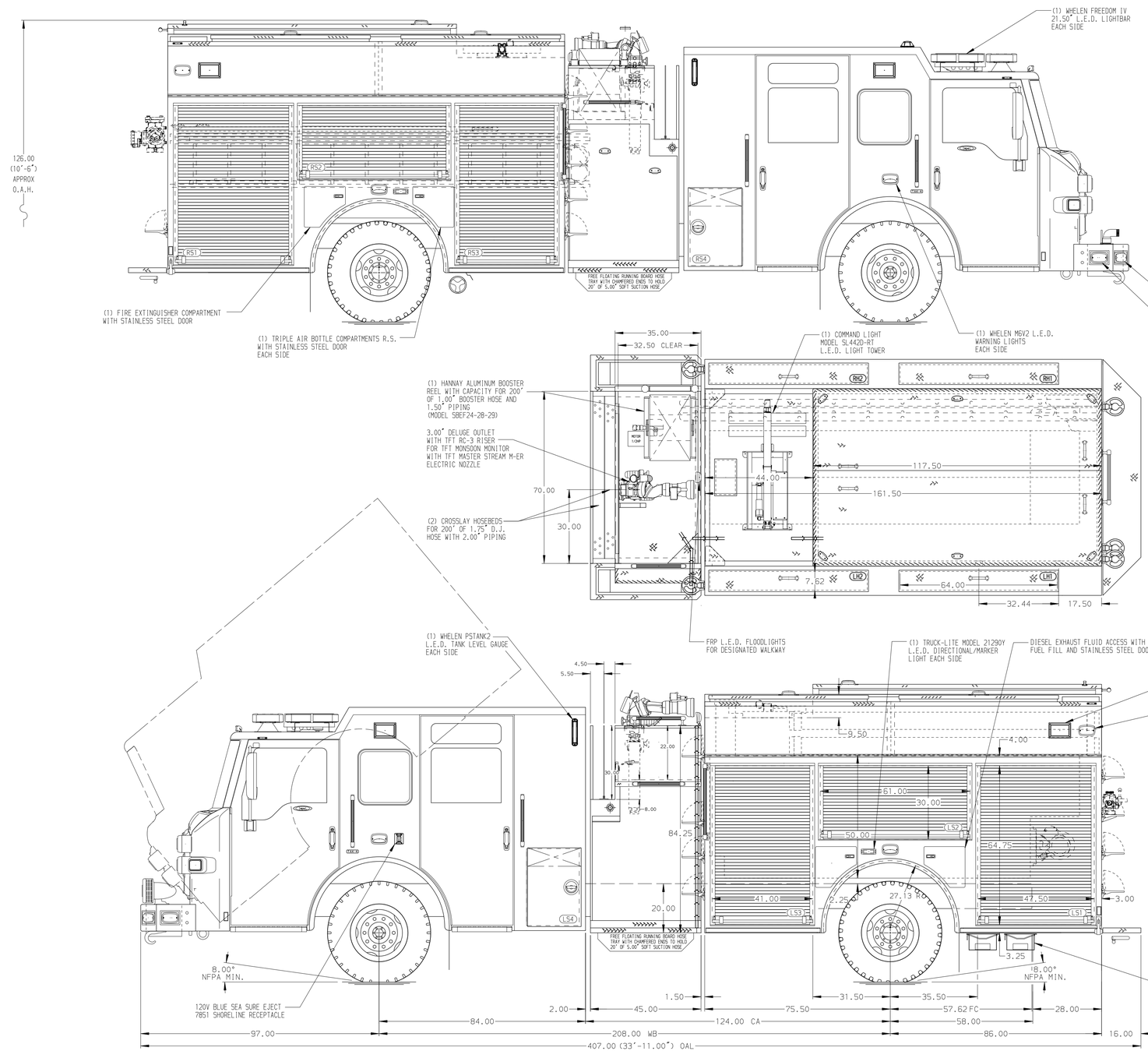

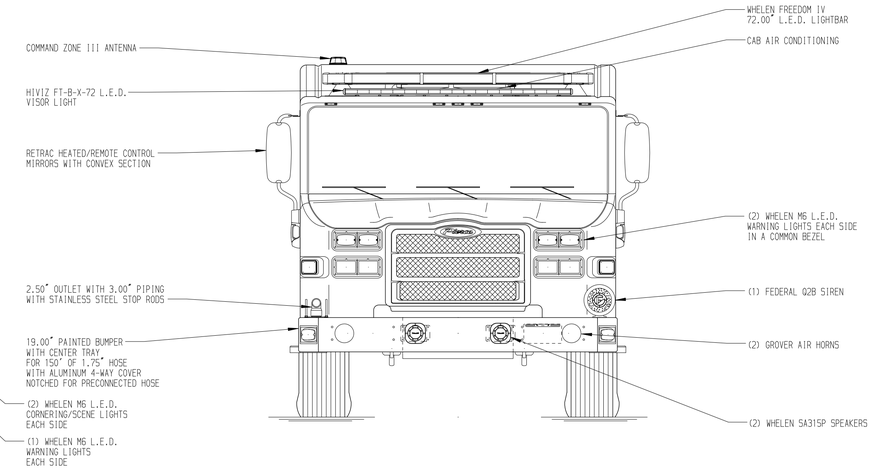

HOSEBED CAPACITIES

1. 300' OF 2.50" D.J.POLY HOSE
2. 300' OF 3.00" D.J.POLY HOSE
3. 1000' OF 5.00" D.J.POLY HOSE

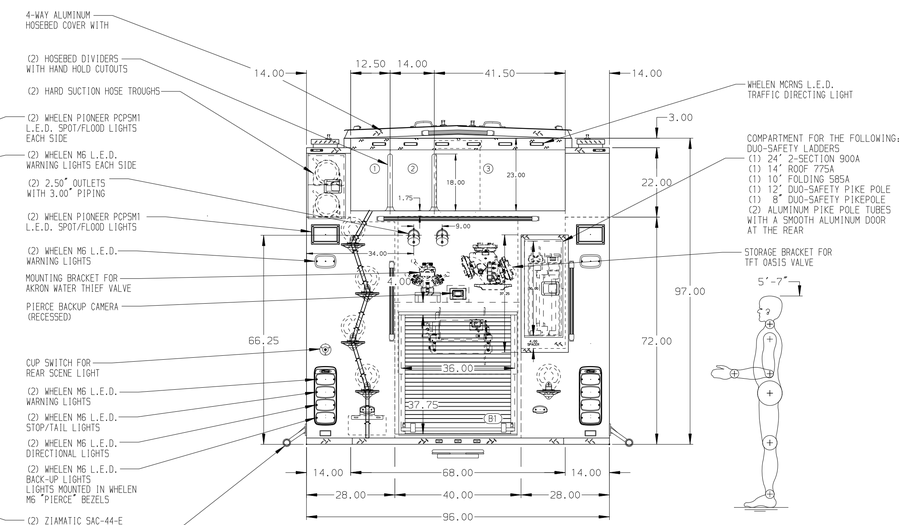

ALUMINUM BODY

NOTE

DIMENSIONS SHOWN ARE APPROXIMATE AND ARE SUBJECT TO MINOR DEVIATIONS AS MAY OCCUR OR BE NECESSARY IN CONSTRUCTION.
MINOR DETAILS NOT SHOWN.

1. BATTERY CHARGER LOCATED BEHIND DRIVER SEAT
2. BATTERY CHARGE INDICATOR LOCATED NEAR DRIVER'S SEAT RISER WITH BRACKET
3. DRIP PAN GUARD FOR ROLL-UP DOOR LOCATED IN COMPARTMENT LS1,LS2,LS3,RS1,RS2,RS3,B1
4. ONE FULL WIDTH/DEPTH ADJUSTABLE SHELF IN COMPARTMENTS LS1,LS3,TWO IN RS1,RS3
5. ONE ADJUSTABLE TILT/SLIDE OUT TRAY LOCATED IN COMPARTMENT LS2
5. ONE FLOOR MOUNTED SLIDE-OUT TRAY IN COMPARTMENTS LS1,B1
6. CTECH (3) DRAWER ASSEMBLY IN COMPARTMENT LS3
7. ONE HANNAY ELECTRIC REWIND CORD REEL MODEL 1614-17-18 WITH 100' OF 12/3 CABLE LOCATED IN COMPARTMENT B1
8. ONE TRANSVERSE SLIDE-OUT TRAY IN COMPARTMENT LS4/RS4
10. PAC-TRAC LOCATED ON THE BACK WALL OF COMPARTMENTS LS2,RS1,RS2,RS3
11. TWO FHU RH-6 PIKE POLES STORED IN TRANSVERSE LS4/RS4 TRAY
12. XANTREX INVERTER LOCATED IN COMPARTMENT LS3
13. ONE 120V RECEPTACLE LOCATED IN COMPARTMENTS LS1,RS3

REV	DATE	BY	CH
V	03JUN20	SHD	CHR
B	21APR20	JWO	GKH
V	29JAN20	JWO	WKL

CHASSIS DATA
MAKE: PIERCE
MODEL: IMPEL FR

Pierce MANUFACTURING INC.

TITLE: 2000-D-1000 WATER,161",FULL HEIGHT,FULL DEPTH DS SIDE CONTROL, CROSSLAYS, LADDER COMPARTMENT
FOR: LAKE JACKSON VFD, LAKE JACKSON, TEXAS
DWG NO.: 34766AD

JOB NO.	34766
SCALE	1:24
DATE	
DRAWN BY	JWO 24JAN20
CHECKED BY	WKL 24JAN20
SHEET SIZE	D
SHEET NO.	1 OF 1

View File Created 15-JUN-2020 07:21:11