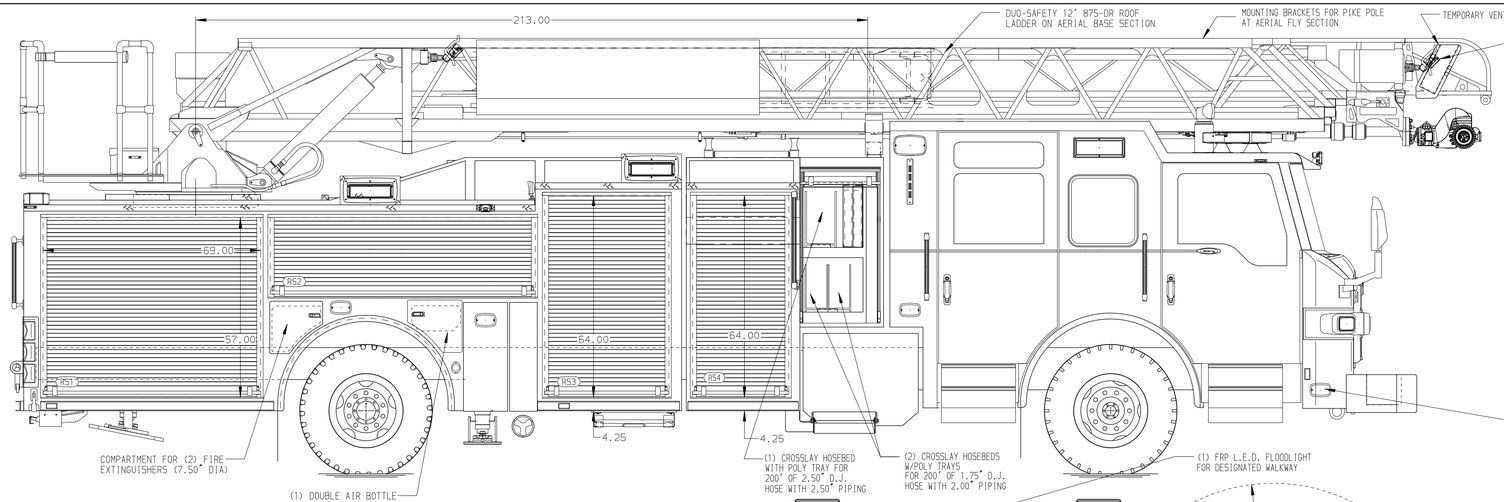

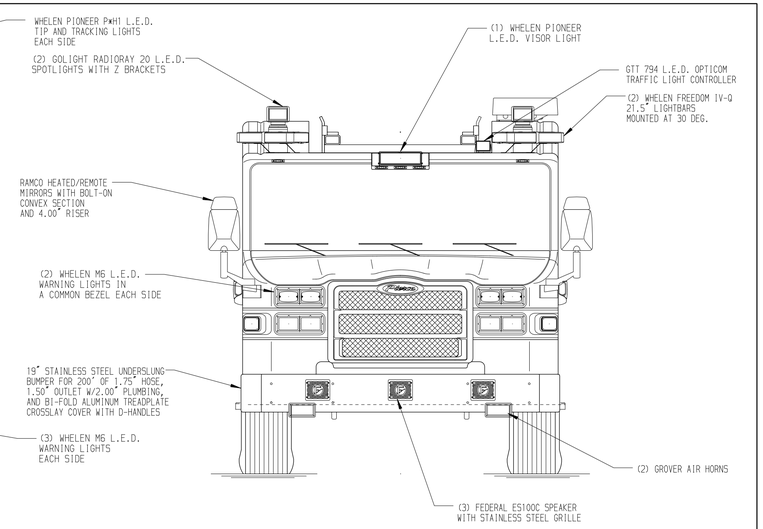

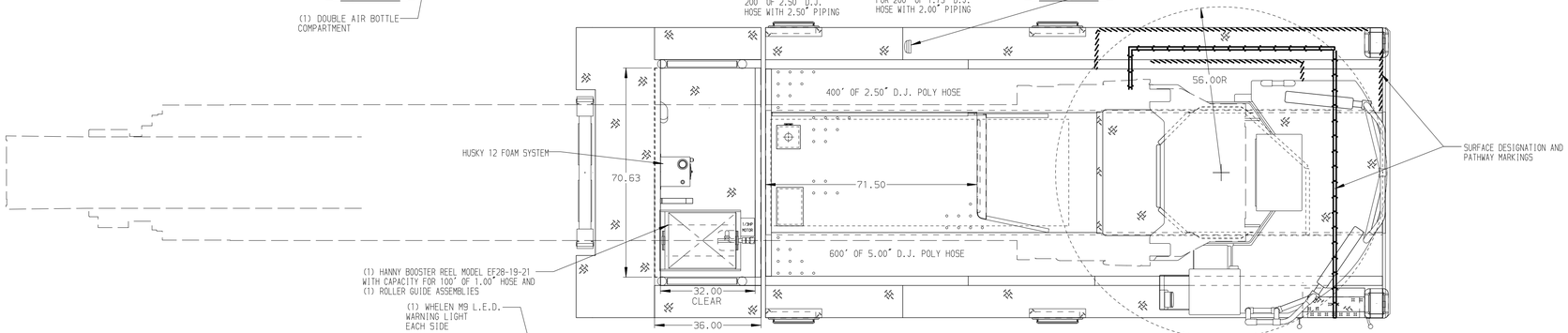

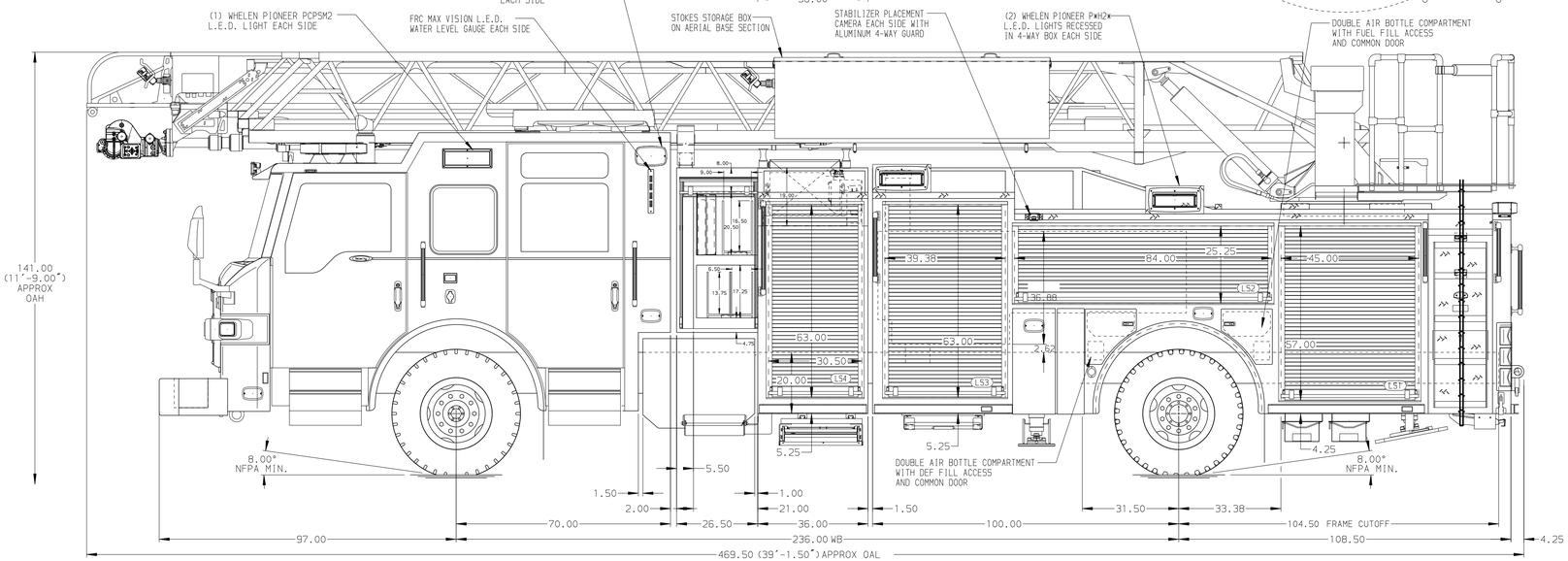

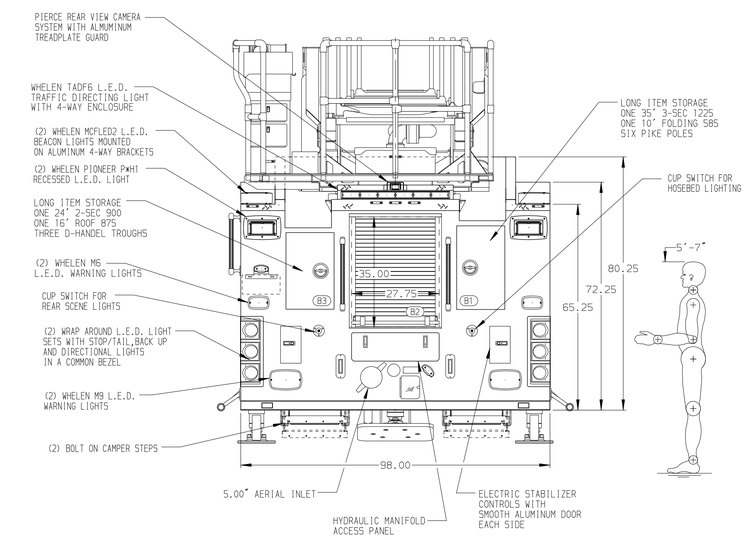

ALUMINUM BODY

SIDE ROLL AND FRONTAL IMPACT PROTECTION

NOTE

DIMENSIONS SHOWN ARE APPROXIMATE AND ARE SUBJECT TO MINOR DEVIATIONS AS MAY OCCUR OR BE NECESSARY IN CONSTRUCTION.
MINOR DETAILS NOT SHOWN.

1. ONE 1.50 OUTLET WITH 2.00 PIPING AND SWIVEL LOCATED IN CENTER BUMPER TRAY
2. SHORELINE RECEPTACLE WITH KUSSMAUL SUPER AUTO-EJECT LOCATED ON DRIVERS SIDE CAB
3. AIR INLET WITH DISCONNECT COUPLING ON DRIVERS SIDE PUMP PANEL
4. BATTERY CHARGER LOCATED IN CAB PER SHOP ORDER
5. BATTERY CHARGE INDICATOR LOCATED ON DRIVERS SIDE PUMP PANEL
6. AIR OUTLET WITH SHUT OFF VALVE ON DRIVERS SIDE PUMP PANEL
7. RUNG LIGHTING ON AERIAL
8. NON-RAISED AERIAL PEDESTAL
9. 1500 GPM HIGH FLOW WATERWAY
10. 2-WAY INTERCOM SYSTEM BETWEEN AERIAL TIP AND TURNTABLE
11. TWO PULL STRAPS ON COMPARTMENT DOORS PER SHOP ORDER
12. EIGHT ADJUSTABLE SHELVES IN COMPARTMENT PER SHOP ORDER
13. ONE ADJUSTABLE SLIDE-OUT TRAY IN COMPARTMENT PER SHOP ORDER
14. TWO ADJUSTABLE TILT/SLIDE-OUT TRAYS IN COMPARTMENT PER SHOP ORDER
15. FIVE FLOOR MOUNTED SLIDE-OUT TRAYS W/SIDE SLIDES IN COMPARTMENTS PER SHOP ORDER
16. ONE SWING-OUT TOOLBOARD IN COMPARTMENT PER SHOP ORDER
17. ONE PEGBOARD ON BACK OF COMPARTMENT WALL PER SHOP ORDER
18. ONE VERTICAL PARTITION IN COMPARTMENT PER SHOP ORDER
19. NO LIMITED RETRACTION

REV	DATE	BY	CH
1	01JUN20	LWE	LPA
2	11MAY20	LWE	LPA
3	17APR20	LWE	LPA
4	27JAN20	LWE	NDA

CHASSIS DATA
MAKE: PIERCE
MODEL: VELOCITY

Pierce MANUFACTURING INC.

TITLE: 107' ASCENDANT HSL AERIAL LADDER AND BODY ASSEMBLY
325 GALLON TANK - 300 WATER/25 FOAM

FOR: MARICOPA FD
MARICOPA, AZ

DWG NO.: 34756AD

JOB NO.	34765
SCALE	1:24
DATE	
DRAWN BY	LWE 19FEB20
CHECKED BY	NDA 21FEB20
SHEET SIZE	D
SHEET NO.	1 OF 1

View File Created 02-JUN-2020 07:23:02