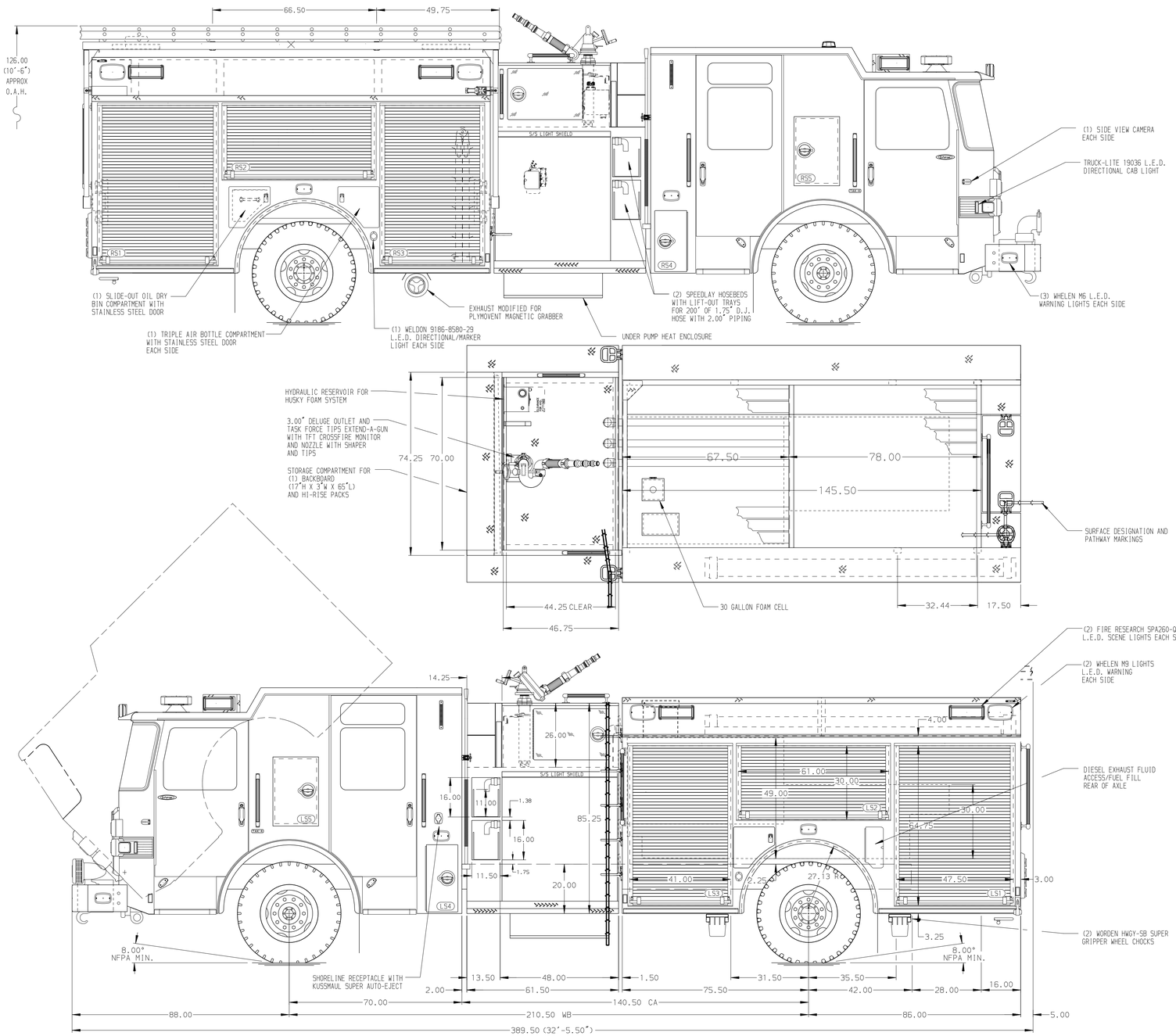

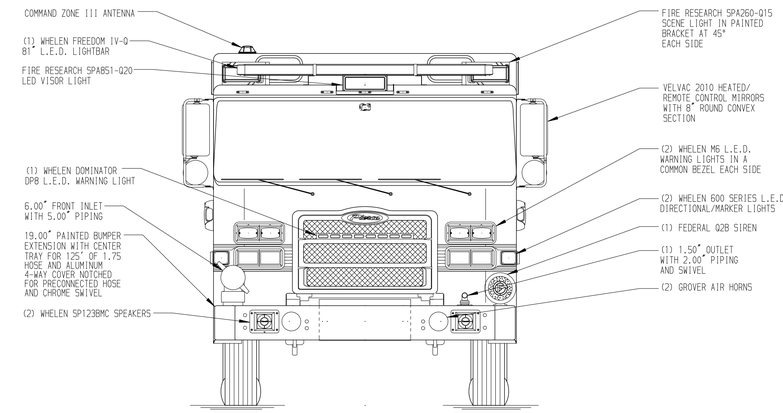

HOSEBED CAPACITIES

1. 800' OF 5.00" D.J. POLY HOSE
2. 200' OF 1.75" D.J. POLY HOSE
3. 400' OF 2.00" D.J. POLY HOSE
4. 300' OF 1.75" D.J. POLY HOSE
5. 250' OF 3.00" D.J. POLY HOSE

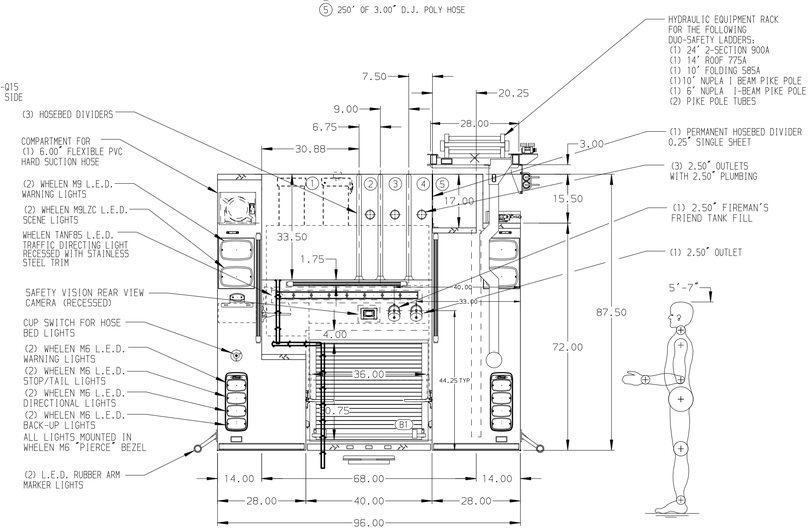

ALUMINUM BODY

MAXIMUM O.A.H. 126.00"

SIDE ROLL AND FRONTAL IMPACT PROTECTION

NOTE

DIMENSIONS SHOWN ARE APPROXIMATE AND ARE SUBJECT TO MINOR DEVIATIONS AS MAY OCCUR OR BE NECESSARY IN CONSTRUCTION.
MINOR DETAILS NOT SHOWN.

1. BATTERY CHARGER LOCATED BEHIND THE DRIVER SEAT
2. BATTERY CHARGE INDICATOR LOCATED ON DRIVER'S SEAT RISER
3. DRIP PAN GUARD FOR ROLL-UP DOOR LOCATED LS1,LS2,LS3,RS1,RS2,RS3 AND B1
4. ONE FULL WIDTH/DEPTH ADJUSTABLE SHELF IN COMPARTMENTS LS1,LS3,RS1 AND B1
5. ONE ADJUSTABLE TILTING SLIDE-OUT TRAY IN COMPARTMENT RS2
6. ONE FLOOR MOUNTED SLIDE-OUT TRAY IN COMPARTMENTS RS1
7. ONE SLIDE-OUT TOOLBOARD WITH PEGBOARD IN COMPARTMENT RS3 AND RS1 ADDED TO TRAY
8. PAC TRAC ON BACK WALL OF COMPARTMENT LS1 LS2 AND LS3
9. PARTITION BETWEEN COMPARTMENTS LS1/B1 AND RS1/B1
10. ONE VERTICAL PARTITION IN COMPARTMENT RS1 AND RS3
11. HOT WATER HEATER IN PUMP COMPARTMENT
12. MIC AND SPEAKER COMPARTMENT LOCATED ON DRIVER'S SIDE PUMP PANEL
13. ONE 120V DUPLEX RECEPTACLE LOCATED IN COMPARTMENT LS1; TWO IN CAB
14. 120V RECEPTACLE STRIP LOCATED IN CAB
15. KUSSMAUL AIR COMPRESSOR LOCATED IN COMPARTMENT LS3
16. TWO POLY TOOL BOXES IN COMPARTMENT RS1
17. CTECH DRAWER ASSEMBLY IN COMPARTMENT RS1
18. LITTLE GIANT LADDER IN COMPARTMENT RS3
19. HORIZONTAL PARTITION IN COMPARTMENT RS1
20. PEGBOARD IN COMPARTMENT RS1
21. 1" RETAINING LIP ON THE COMPARTMENT FLOOR OF RS1

REV	DATE	BY	CH
7	24SEP20	LME	KWI
6	11MAY20	SHD	PJP
5	09APR20	LME	PJP
4	27FEB20	LME	EGO

CHASSIS DATA	
MAKE	PIERCE
MODEL	ENFORCER
DWG NO.	34707AD

Pierce MANUFACTURING INC.

TITLE	1500-780P, 750 WATER W//30 FOAM CELL, 161" BODY (2) SPEEDLAYS, DELUGE, HUSKY 12, HLR
FOR	NORTH LIBERTY FIRE DEPARTMENT NORTH LIBERTY, IOWA

JOB NO.	34707
SCALE	1:24
DATE	
DRAWN BY	LME 20FEB20
CHECKED BY	EGO 20FEB20
SHEET SIZE	D
SHEET NO.	1 OF 1

View File Created 24-SEP-2020 12:30:10