# PUMPER

## BODY
Long Aluminum 2nd Gen Pumper

## CHASSIS
Impel Chassis

# CHASSIS

## AXLE, FRONT, CUSTOM
22,800 lb TAK-4 Axle

## AXLE, REAR
27,000 lb Meritor Axle

## ENGINE
450 HP Cummins L9 Engine

## TRANSMISSION
Allison 5th Gen, 3000 EVS P

## BUMPER
26" Extended Painted Steel

## CAB
6010 Impel FR Cab

# BODY

## WATER TANK
750 Gallon Poly Water Tank

## COMPT, PUMPER, REAR
37.75" FF Rollup Rear Compt

## COMPT, PUMPER, DRIVER SIDE
161" Rollup Full Height Front & Rear FDLER

## COMPT, PUMPER PASS. SIDE
161" Rollup Full Height Front & Rear FDLER

# FIRE SUPPRESSION

## PUMPHOUSE
52" Control Zone Side Mount

## PUMP
1500 GPM Hale QMAX

## CROSSLAYS, 1.50"
1.50" Crosslays Not Required

## CROSSLAYS, 2.50"
2.50" Crosslay Not Required

## SPEEDLAYS
(3) 1.50" W/Tray Special Capacity

## GENERATOR
Harrison 6kW MCR Generator

## Foam System
Foam System Not Required

## Foam Cell
Foam Cell Not Required

Side Roll and Frontal Impact Protection

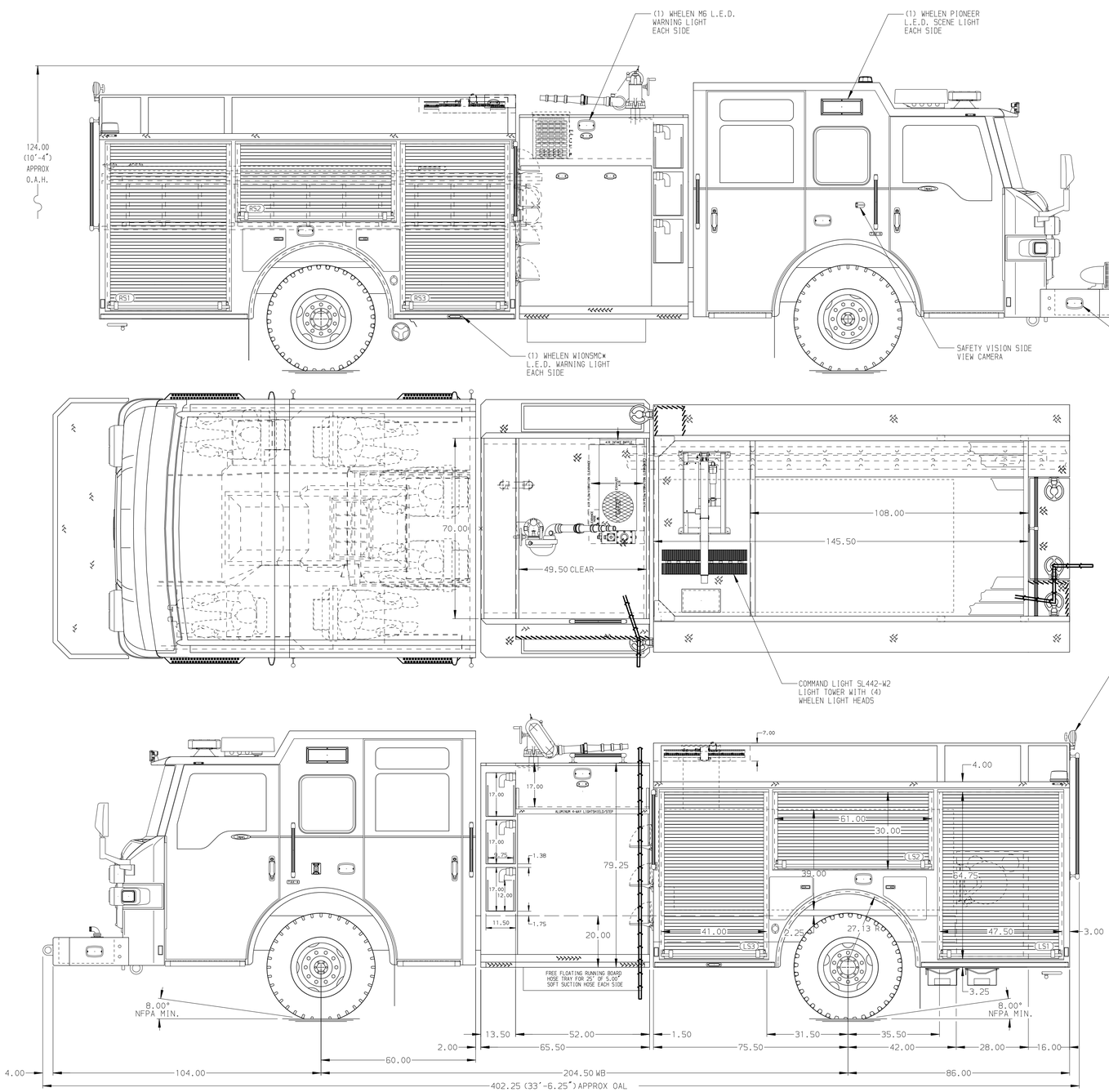


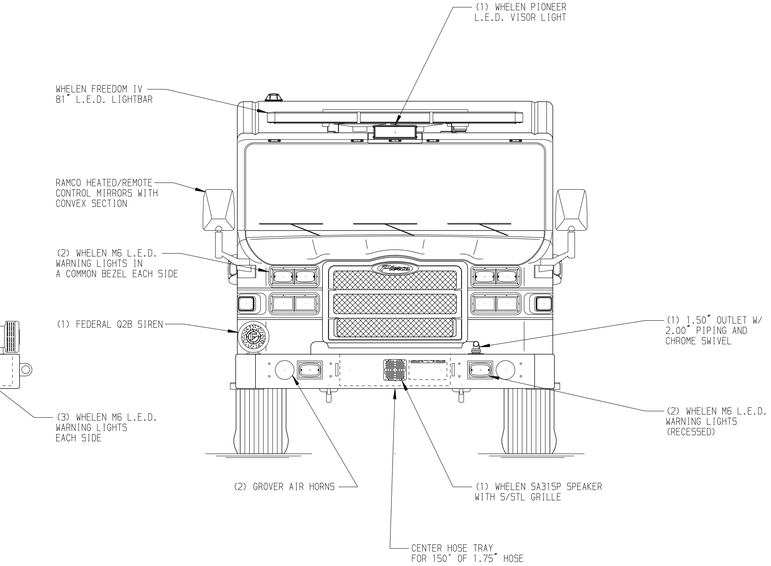


## HOSEBED CAPACITY

**BED 1**
200' OF 2.50" D.J. POLY HOSE

**BED 2**
1200' OF 5.00" D.J. POLY HOSE

**BED 3**
200' OF 3.00" D.J. POLY HOSE

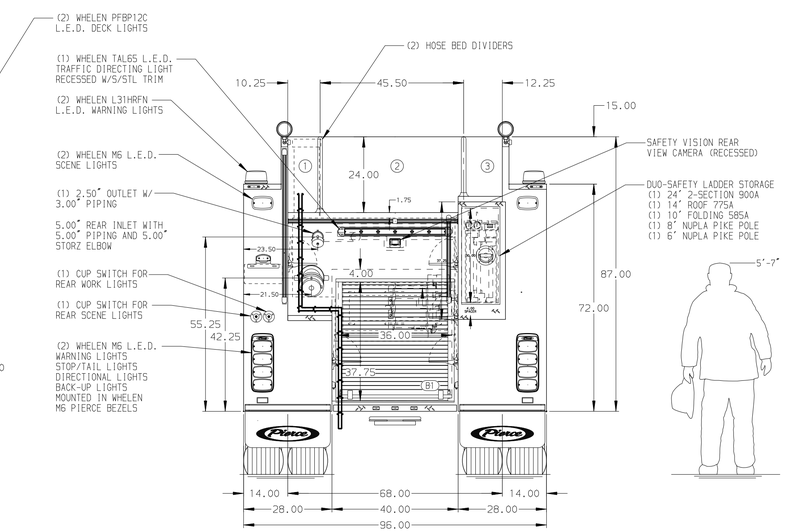


NOTE

DIMENSIONS SHOWN ARE APPROXIMATE AND ARE SUBJECT TO MINOR DEVIATIONS AS MAY OCCUR OR BE NECESSARY IN CONSTRUCTION.
MINOR DETAILS NOT SHOWN.

1. FEDERAL RUMBLER-3 AUXILIARY SIREN LOCATED PER SHOP ORDER
2. SHORELINE RECEPTACLE WITH BLUE SEA SURE EJECT LOCATED ON DRIVERS SIDE OF CAB
3. AIR INLET WITH DISCONNECT COUPLING IN THE DRIVER SIDE PUMP PANEL
4. BATTERY CHARGER LOCATED BEHIND DRIVERS SEAT
5. BATTERY CHARGE INDICATOR LOCATED NEAR DRIVER SEAT RISER WITH BRACKET
6. FOUR ADJUSTABLE SHELVES LOCATED PER SHOP ORDER
7. THREE FLOOR MOUNTED SLIDE-OUT TRAY LOCATED PER SHOP ORDER
8. PAC TRAC LOCATED PER SHOP ORDER
9. CIRCUIT BREAKER PANEL LOCATED PER SHOP ORDER
10. HANNAY CORD REEL MODEL E1618-17-18 LOCATED PERSHOP ORDER WITH 200' OF 10/3 CABLE

| REV | DATE | BY | CH |
|---|---|---|---|
| 5 | 23MAR20 | COL | CHR |
| 4 | 18FEB20 | COL | CHR |

CHASSIS DATA
MAKE: PIERCE
MODEL: IMPEL

Pierce MANUFACTURING INC.

TITLE: Pierce Pumper Approval Drawing
-
FOR: Pasadena VFD
-
DWG NO.: 34706AD

JOB NO. 34706 01-02
SCALE 1:24
DATE
DRAWN BY COL 13JAN20
CHECKED BY KBO 13JAN20
SHEET SIZE D
SHEET NO. 1 OF 1

View File Created 23-MAR-2020 08:36:45