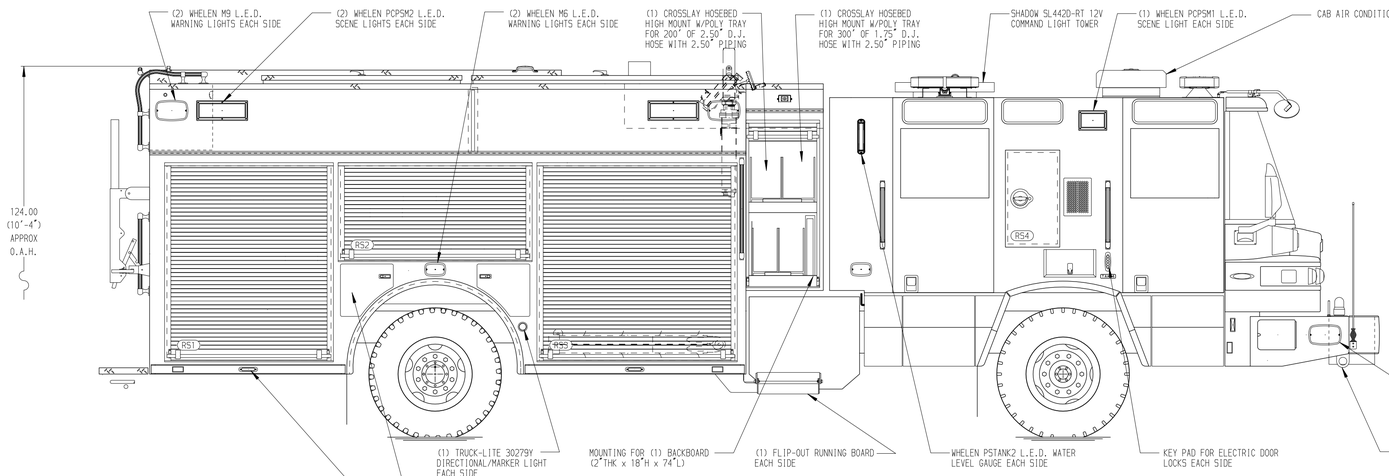

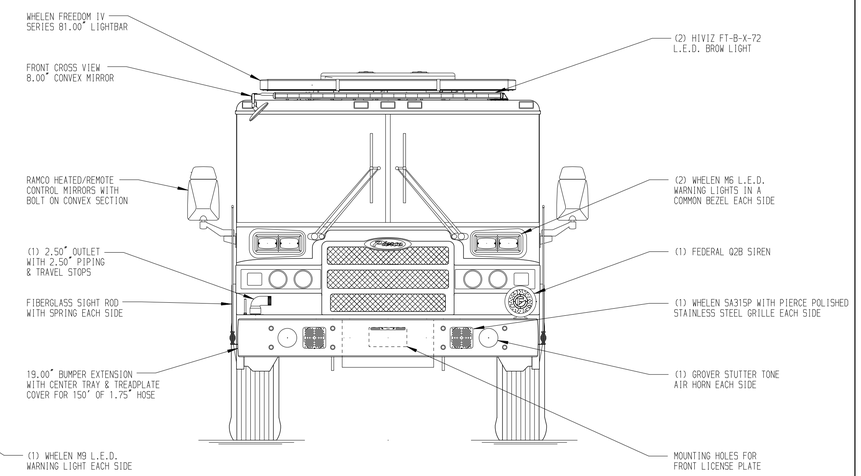

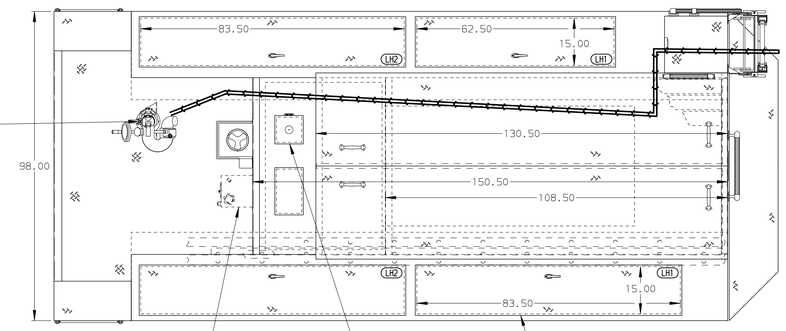

HOSEBED CAPACITIES
1 - 700' OF 3.00" HOSE
2 - 1000' OF 5.00" HOSE
3 - 300' OF 3.00" HOSE

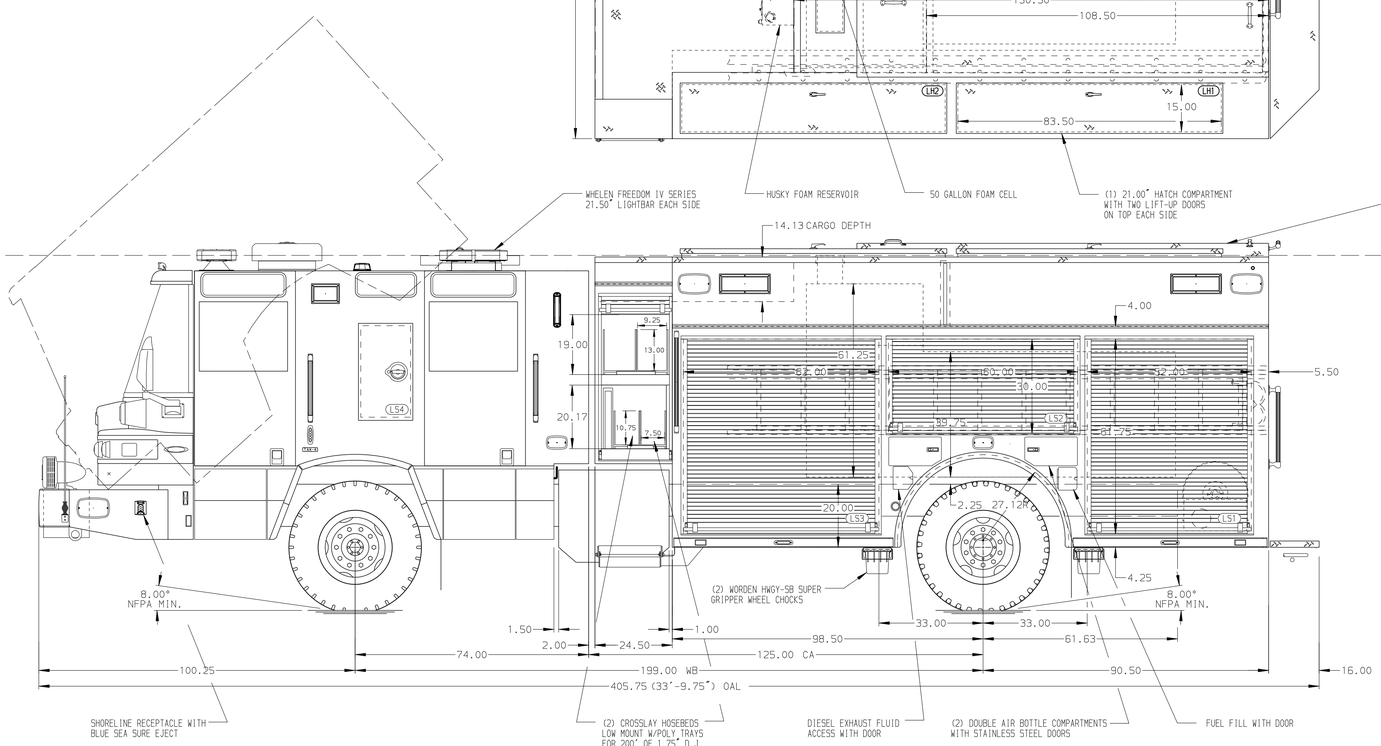

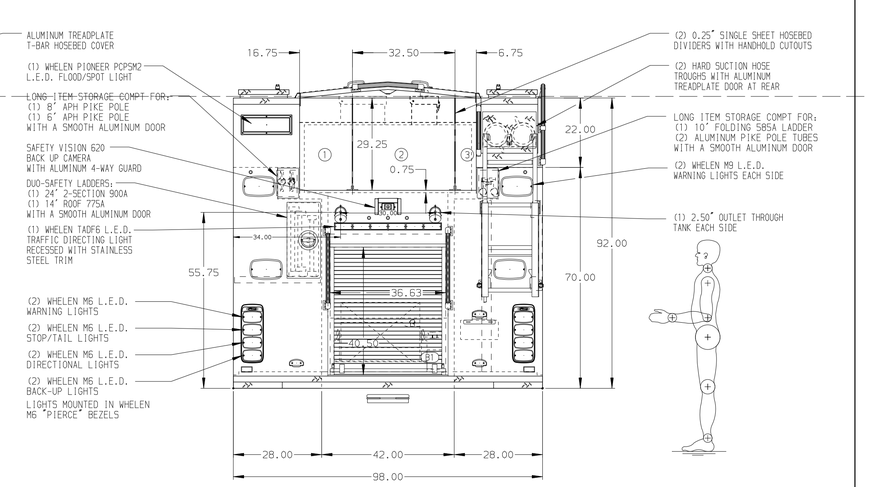

ALUMINUM BODY

SIDE ROLL AND FRONTAL IMPACT PROTECTION

NOTE

DIMENSIONS SHOWN ARE APPROXIMATE AND ARE SUBJECT TO MINOR DEVIATIONS AS MAY OCCUR OR BE NECESSARY IN CONSTRUCTION.
MINOR DETAILS NOT SHOWN.

1. AIR INLET/OUTLET WITH DISCONNECT FITTING LOCATED ON DS PUMP PANEL
2. BATTERY CHARGER LOCATED IN PUMP PLUMBING AREA
3. BATTERY CHARGE INDICATOR LOCATED ON D.S. SEAT RISER
4. ELECTRIC DOOR LOCK ON COMPARTMENT RS3
5. ONE ADJUSTABLE FULL WIDTH/FULL DEPTH SHELF IN COMPARTMENT LS3, RS1, THREE IN LS1, FIVE IN RS3
6. ONE ADJUSTABLE SLIDE-OUT TRAY IN COMPARTMENT B1
7. ONE ADJUSTABLE TILTING SLIDE-OUT TRAY IN COMPARTMENT RS1 & RS2
8. ONE FLOOR MOUNTED SLIDE-OUT TRAY IN COMPARTMENT LS1, LS3 & RS1
9. ONE SWING-OUT ALUMINUM TOOL BOARD IN COMPARTMENT LS2
10. MERMAID MK 747 REFRIDGERATOR LOCATED IN COMPARTMENT RS3
11. PAC TRAC ON THE REAR WALL OF COMPARTMENT LS3
12. ONE VERTICAL BOLT-IN PARTITION BETWEEN COMPARTMENTS LS1/B1 & RS1/B1
13. STORAGE FOR LITTLE GIANT 17' LADDER IN COMPARTMENT RS3
14. HANNAY BOOSTER HOSE REEL MODEL(EF32-21-22-8) WITH CAPACITY FOR 200' OF 1.00" HOSE LOCATED IN COMPARTMENT B1
15. ONE VERTICAL PARTITION IN COMPARTMENT LS1 & RS3

REV	DATE	BY	CH
7	14AUG20	BKB	AZA
6	21JAN20	JWO	AZA
5	24JAN20	JWO	KOU

CHASSIS DATA
MAKE: PIERCE
MODEL: QUANTUM

Pierce MANUFACTURING INC.

TITLE: 1500-D-750P W/50G FOAM,189",FULL HEIGHT,FULL DEPTH (4) X-LAYS,DELUGE,LIGHT TOWER
FOR: YORK COUNTY DEPARTMENT OF FIRE AND LIFE SAFETY YORKTOWN, VIRGINIA
DWG NO.: 34696AD

JOB NO.	34696
SCALE	1:24
DATE	
DRAWN BY	JWO
DATE	15JAN20
CHECKED BY	KOU
DATE	16JAN20
SHEET SIZE	D
SHEET NO.	1 OF 1

View File Created 19-AUG-2020 07:48:29