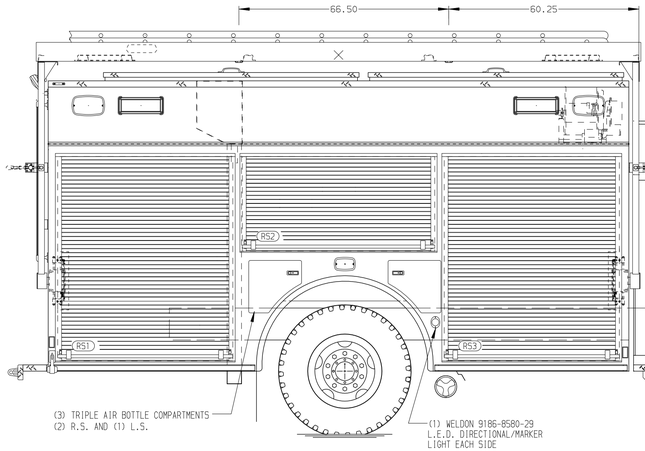

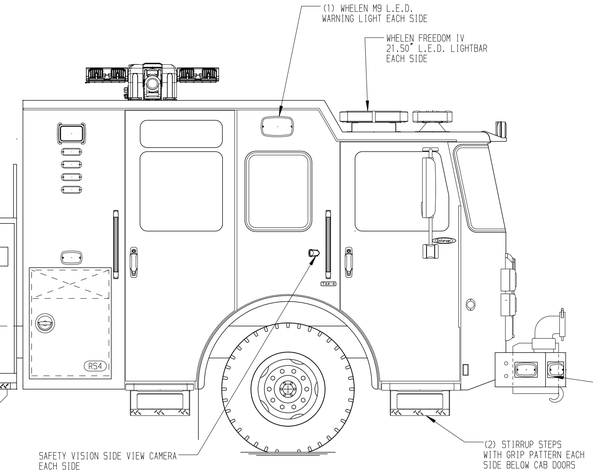

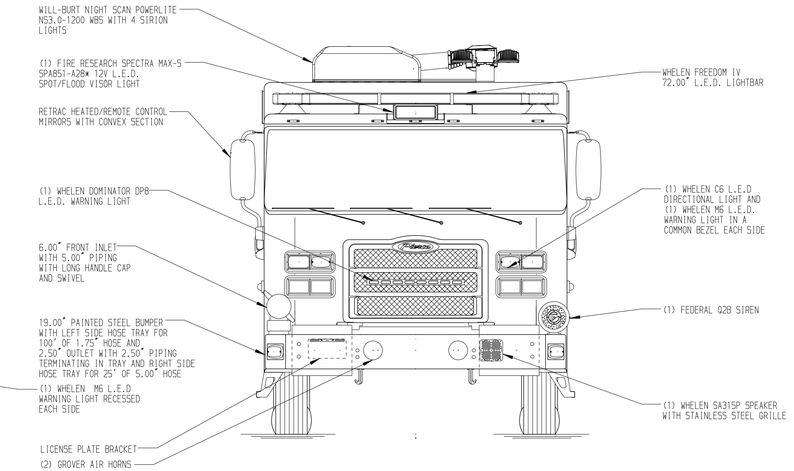

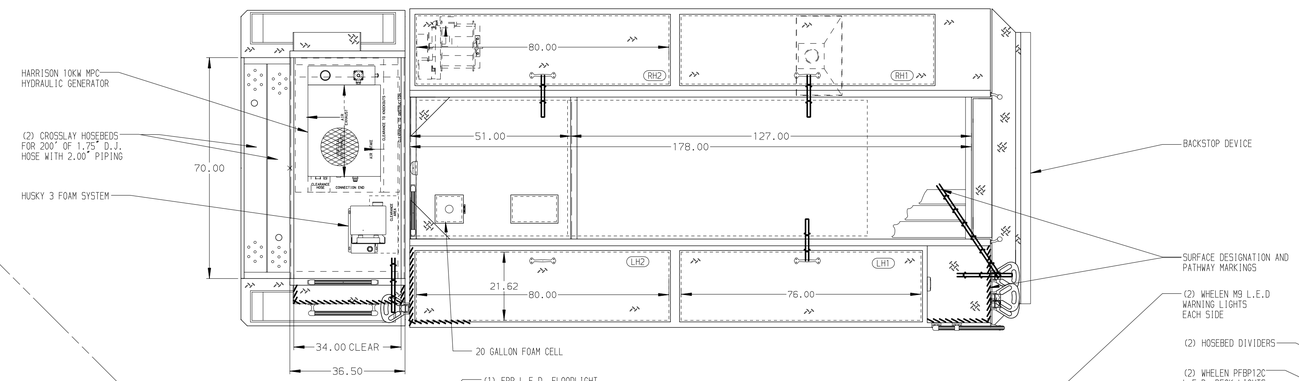

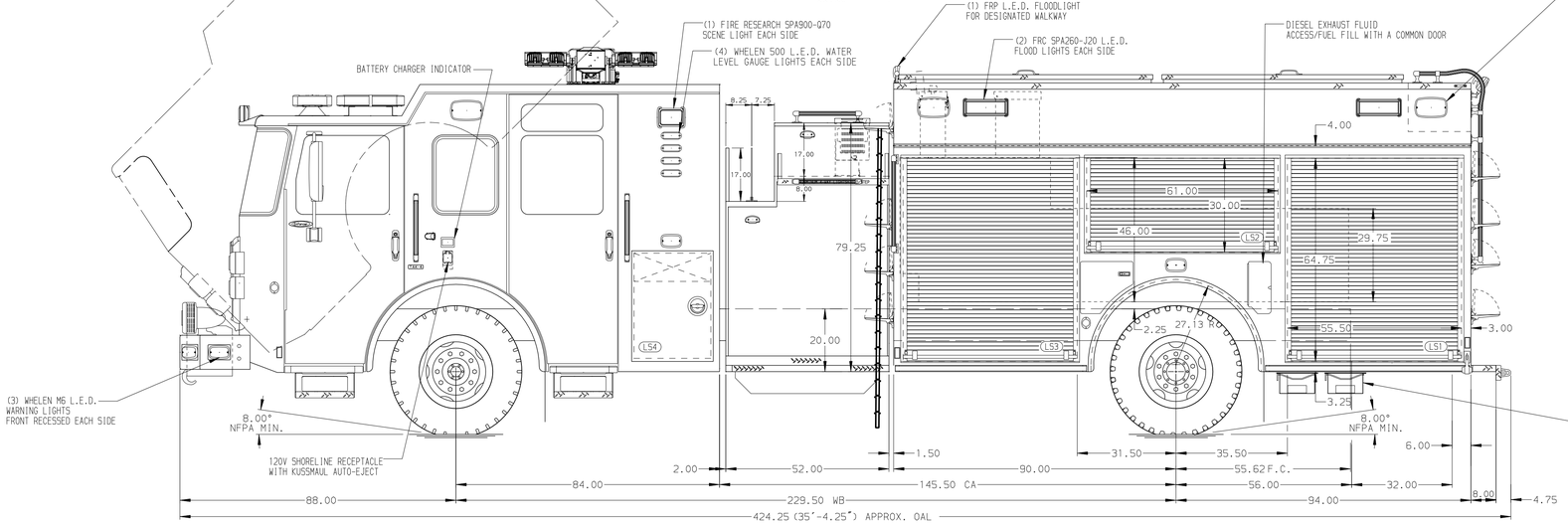

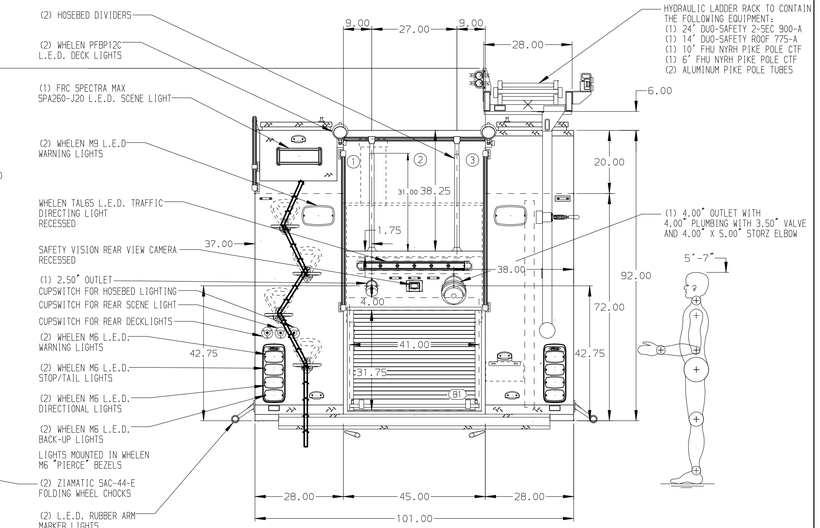

ALUMINUM BODY | MAXIMUM O.A.H. 137.00" | MAXIMUM O.A.L. 424.25" | SIDE ROLL AND FRONTAL IMPACT PROTECTION

NOTE

DIMENSIONS SHOWN ARE APPROXIMATE AND ARE SUBJECT TO MINOR DEVIATIONS AS MAY OCCUR OR BE NECESSARY IN CONSTRUCTION.
MINOR DETAILS NOT SHOWN.

1. BATTERY CHARGER BEHIND THE DRIVER'S SEAT AND COMPRESSOR BEHIND PASSENGER'S SEAT
2. ONE 120V 6-PLACE RECEPTACLE STRIP ON THE ENGINE TUNNEL MOUNTING PLATE AND IN EACH EMS COMPARTMENT

REV	DATE	BY	CH
V	14APR20	JAJ	DTS
B	05MAR20	LST	DTS
V	09JAN20	LST	KOU

CHASSIS DATA
MAKE: PIERCE
MODEL: ENFORCER

Pierce MANUFACTURING INC.

TITLE: 2000-D-750P;730 GAL. WATER/20 GAL. FOAM CELL
184" HDRP BODY;HYDRAULIC LADDER RACK;(2) CROSSLAYS

FOR: BOROUGH OF EATONTOWN
EATONTOWN, NEW JERSEY

DWG NO.: 34670AD-SH1

JOB NO.	34670
SCALE	1:24
DATE	
DRAWN BY	LST 20DEC19
CHECKED BY	CDU 20JAN20
SHEET SIZE	D
SHEET NO.	1 OF 2

View File Created 16-APR-2020 10:55:56