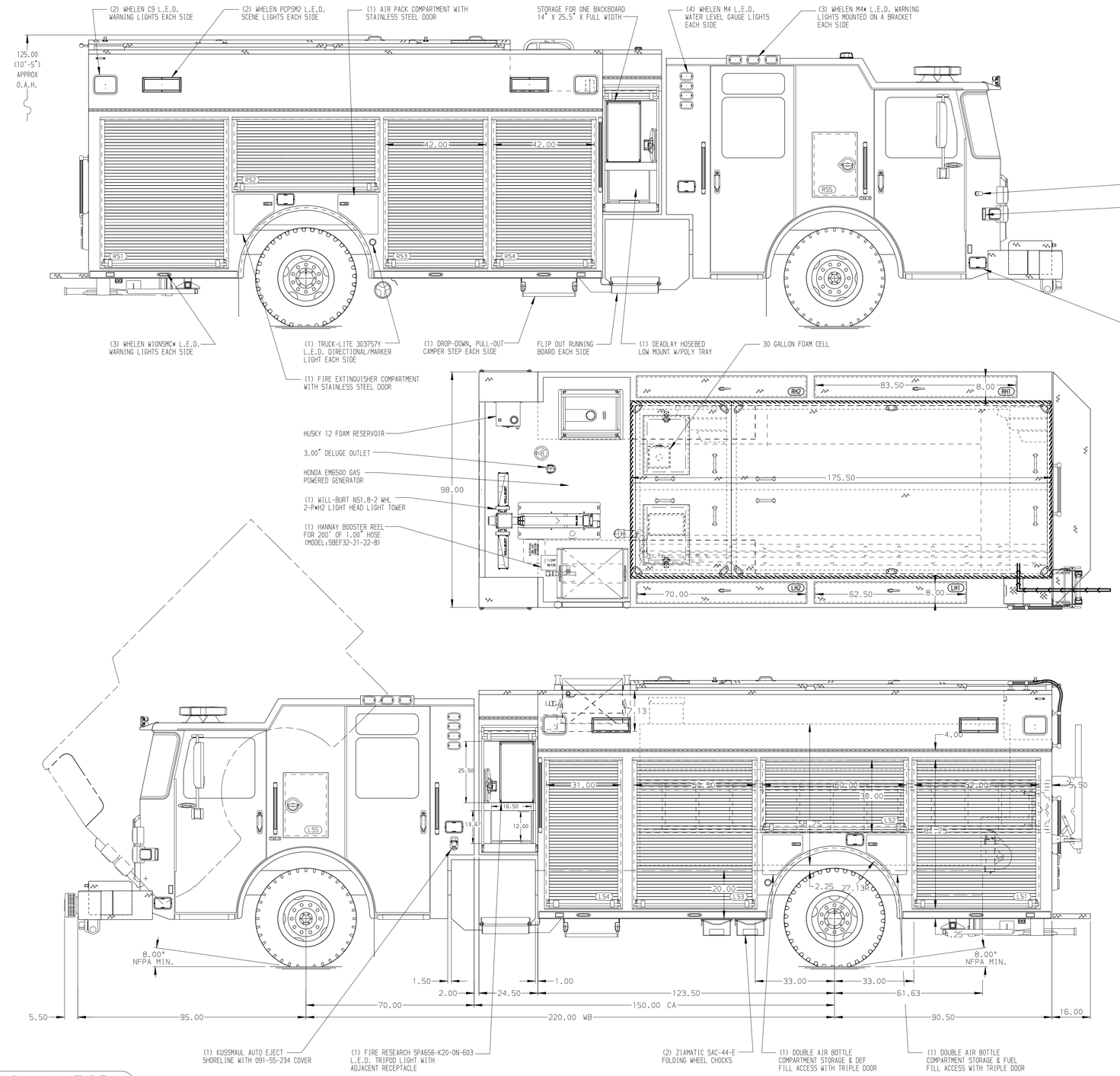

ALUMINUM BODY

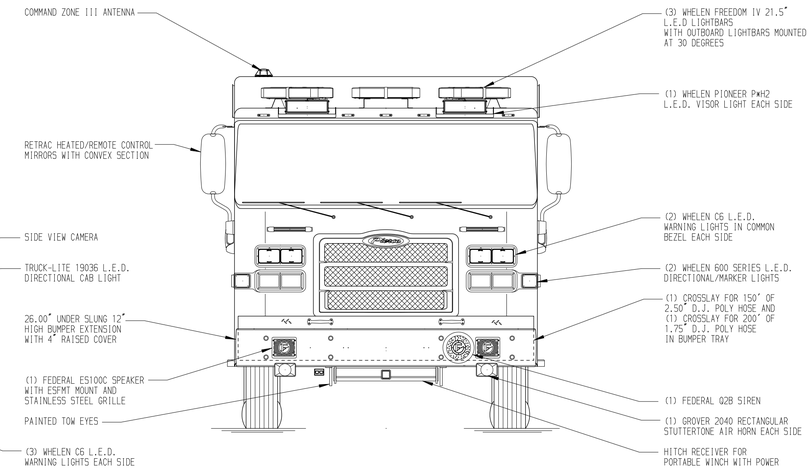

HOSEBED CAPACITIES

1 - 200' OF 2.50" HOSE
2 - 1050' OF 5.00" HOSE

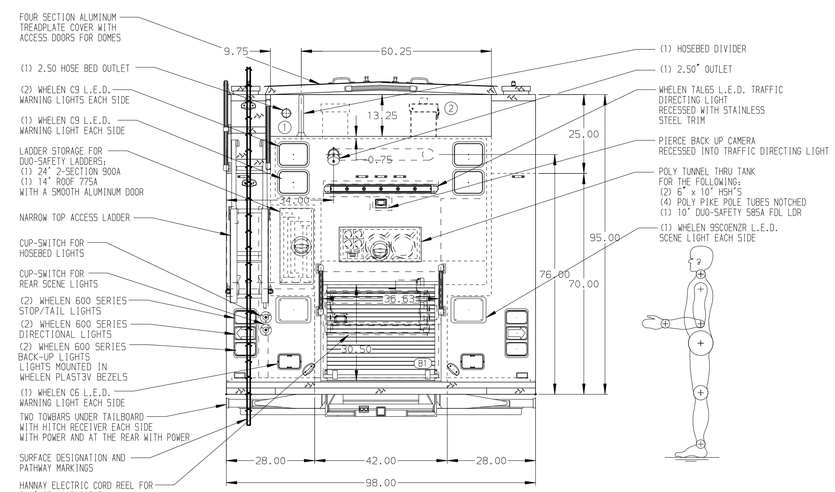

NOTE

DIMENSIONS SHOWN ARE APPROXIMATE AND ARE SUBJECT TO MINOR DEVIATIONS AS MAY OCCUR OR BE NECESSARY IN CONSTRUCTION.
MINOR DETAILS NOT SHOWN.

1. AIR INLET WITH DISCONNECT COUPLING LOCATED IN DRIVER'S SIDE STEP WELL FORWARD
2. BATTERY CHARGER LOCATED IN COMPARTMENT LS4
3. DUAL L.E.D. LIGHT STRIPS LOCATED IN HOSE BED
4. DRIP PAN GUARD FOR ROLL-UP DOOR LOCATED LS1, LS2, LS3, LS4, RS1, RS2, RS3, RS4 & B1
5. ONE FULL WIDTH/DEPTH ADJUSTABLE SHELF IN COMPARTMENT LS1, RS1, RS2, RS3, RS4; TWO IN LS3
6. ONE FLOOR MOUNTED SLIDE-OUT TRAY IN COMPARTMENT LS1, RS1, & B1
7. ONE SWING-OUT ALUMINUM TOOL BOARD IN COMPARTMENT LS2
8. 4-WAY ALUMINUM ON THE FLOOR OF COMPARTMENT LS1, LS2, LS3, LS4, RS1, RS2, RS3, RS4 & B1
9. CIRCUIT BREAKER PANEL IN COMPARTMENT LS3
10. HOSE RACK IN COMPARTMENT LS3

REV	DATE	BY	CH
V	28APR20	JAJ	PPE
V	21APR20	JAJ	PPE
V	18MAR20	KLE	PPE

CHASSIS DATA
MAKE: PIERCE
MODEL: ENFORCER

Pierce MANUFACTURING INC.

TITLE: 1500-D-1630P 1600 WATER, 30 FOAM,214"PUMPER PUC BODY BOOSTER & CABLE REEL, LIGHT TOWER, LADDER TUNNEL
FOR: EAST MANATEE FIRE RESCUE DISTRICT BRADENTON, FLORIDA
DWG NO.: 34660AD

JOB NO.	34660
SCALE	1:24
DATE	
DRAWN BY	AMI
DATE	06JAN20
CHECKED BY	NPE
DATE	6JAN20
SHEET SIZE	D
SHEET NO.	1 OF 1

View File Created 29-APR-2020 08:56:52