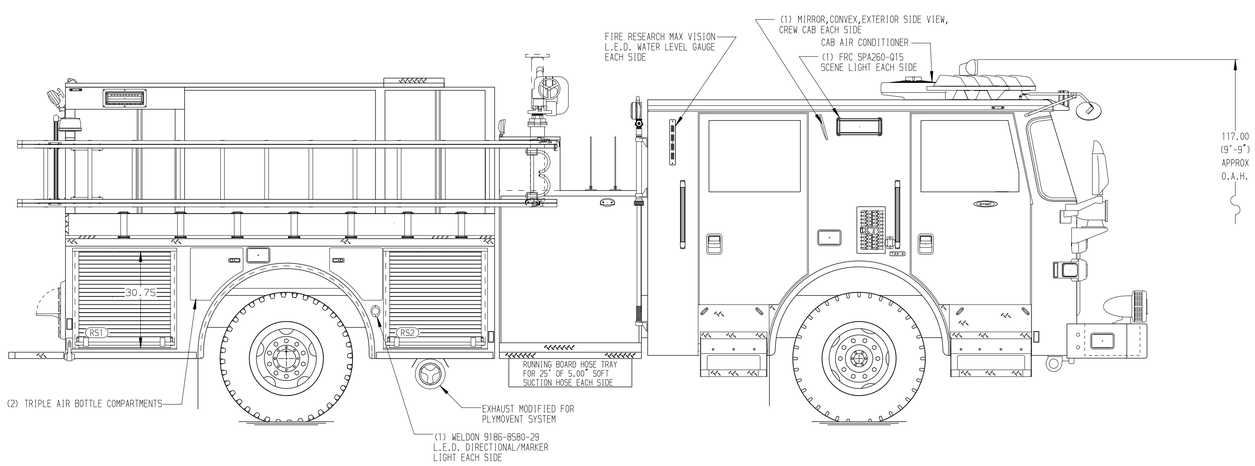

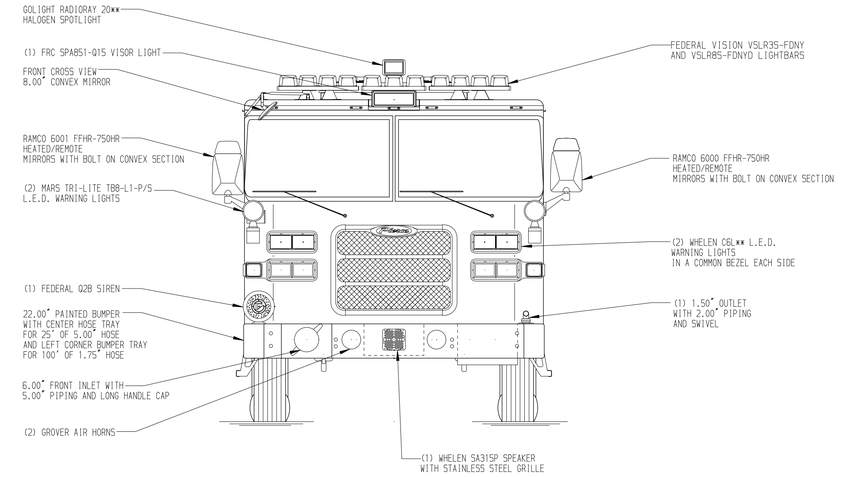

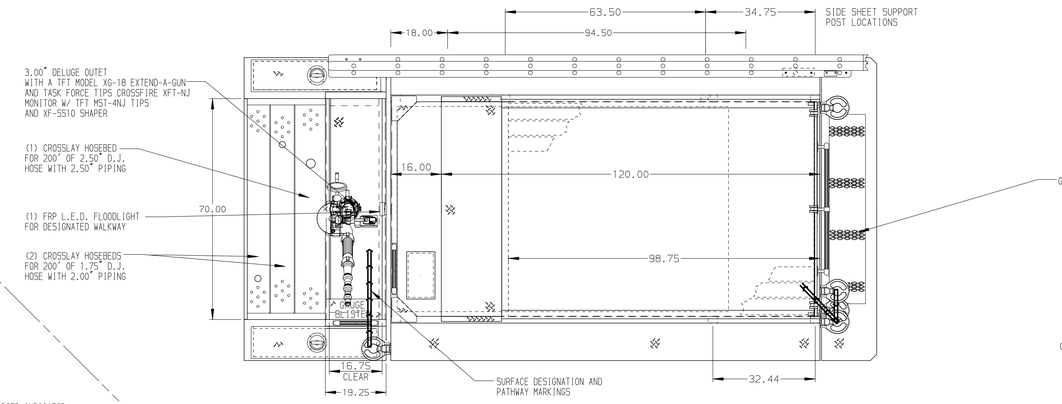

HOSEBED CAPACITIES

1. - 400' OF 2.50" HOSE
2. - 400' OF 2.50" HOSE
3. - 1500' OF 5.00" HOSE
4. - 400' OF 1.75" HOSE

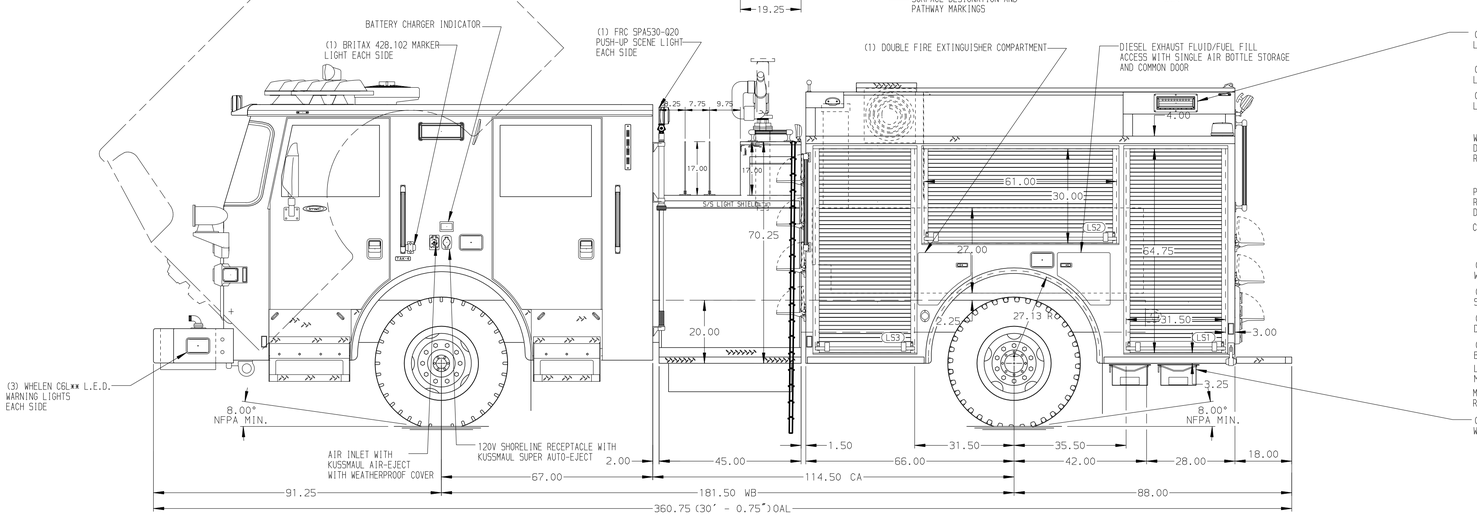

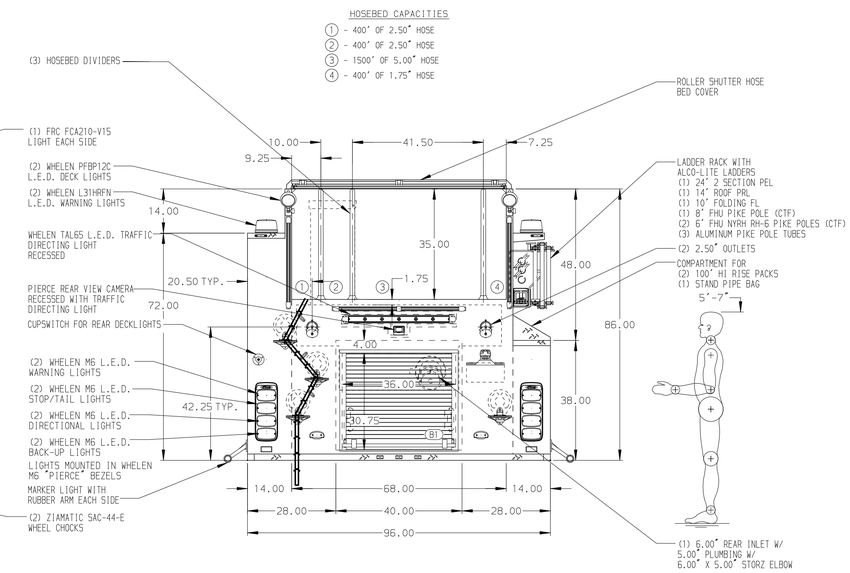

ALUMINUM BODY

MAXIMUM O.A.H. 118.00"

SIDE ROLL AND FRONTAL IMPACT PROTECTION

NOTE

DIMENSIONS SHOWN ARE APPROXIMATE AND ARE SUBJECT TO MINOR DEVIATIONS AS MAY OCCUR OR BE NECESSARY IN CONSTRUCTION.
MINOR DETAILS NOT SHOWN.

1. ONSPOT AUTOMATIC TIRE CHAINS TO BE PROVIDED AT THE REAR
2. BATTERY CHARGER LOCATED BEHIND THE DRIVER'S SEAT
3. DRIP PAN GUARD FOR ROLL-UP DOOR IN LS1, LS2, LS3, B1, RS1, AND RS2
4. FULL WIDTH/DEPTH ADJUSTABLE SHELVES THREE IN LS1 AND LS3 AND ONE IN RS1 AND RS2
5. ONE FLOOR MOUNTED SLIDE-OUT TRAY IN LS1 AND RS1
6. ALUMINUM SWING-OUT TOOLBOARD WITH PAC TRAC IN LS2
7. PAC TRAC ON BACK WALL OF LS3
8. 120V DUPLEX RECEPTACLE IN DRIVER'S SIDE AND PASSENGER'S SIDE EMS COMPARTMENT, LS2, LS3, RS1, AND RS2

REV	DATE	BY	CH
1	11MAR20	LST	CSH
2	11MAR20	LST	CSH
3	12FEB20	LST	CSH
4	06DEC19	CDU	NPE

CHASSIS DATA
MAKE: PIERCE
MODEL: ARROW-XT

Pierce MANUFACTURING INC.

TITLE: 1500-D-500P 136" PUMPER BODY, 45" SIDE CONTROL PH (3)XLAYS, DELUGE, ROLLER SHUTTER HOSEBED COVER

FOR: TOWN OF WINDSOR WINDSOR, CONNECTICUT

DWG NO. 34631AD

JOB NO.	34631
SCALE	1:24
DATE	
DRAWN BY	LST 03DEC19
CHECKED BY	CDU 04DEC19
SHEET SIZE	D
SHEET NO.	1 OF 1

View File Created 12-MAR-2020 08:54:04