Pumper, PUC

BODY
Pumper, PUC, Aluminum

CHASSIS
Enforcer Chassis, PUC

CHASSIS

AXLE, FRONT, CUSTOM
19,500 lb TAK-4 Axle

AXLE, REAR
27,000 lb Dana Axle

ENGINE
450 HP Cummins L9 Engine

TRANSMISSION
Allison 5th Gen, 3000 EVS P

BUMPER
16" Extended Stainless Steel

CAB
7000 Enforcer Cab, PUC

BODY

WATER TANK
750 Gallon Poly Water Tank

COMPT, PUMPER, REAR
33.50" FF Rollup Rear Compt w/Tailboard, PUC

COMPT, PUMPER, LEFT SIDE
189" Lap/Rollup Standard Depth, PUC

COMPT, PUMPER, RIGHT SIDE
189" Lap FHFD Fwd, Std Depth Rear PUC

FIRE SUPPRESSION

PUMPHOUSE
Control Zone, PUC

PUMP
1500 GPM Pierce PUC

CROSSLAYS, 1.50"
(2) 1.50", Poly Trays, 200'

CROSSLAYS, 2.50"
(1) 2.50", Poly Tray, 200'

GENERATOR
Generator Not Required

Foam System
Husky 3 Single Agent Foam System

Foam Cell
30 Gallon Foam Cell, Not Reduced Water, PUC

Side Roll and Frontal Impact Protection

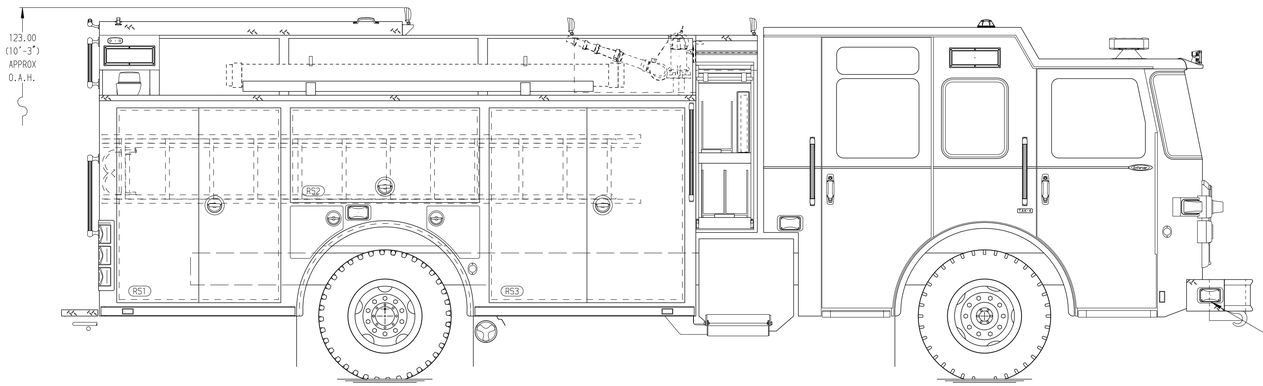

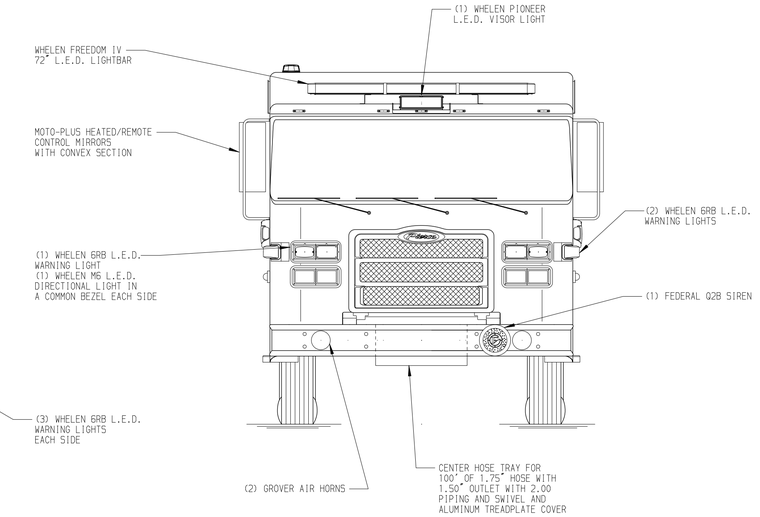

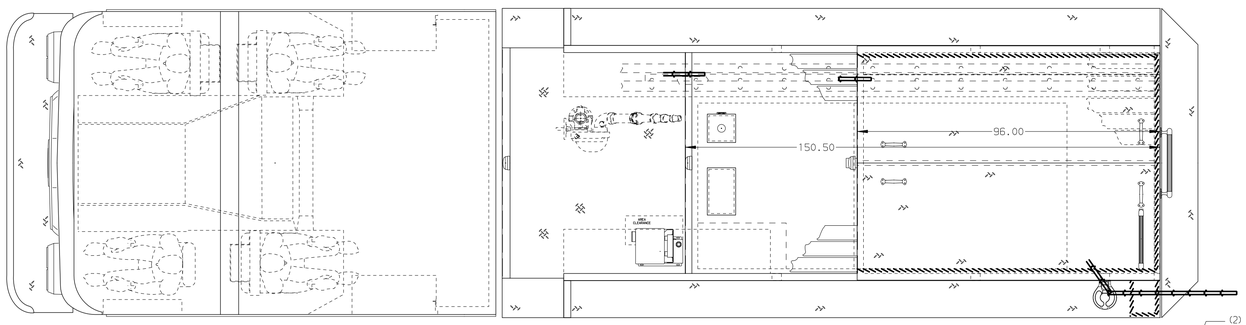

HOSEBED CAPACITY

BED 1
200' OF 1.75" D.J. POLY HOSE

BED 2
200' OF 1.75" D.J. POLY HOSE

BED 3
1000' OF 4.00" LDH

BED 4
200' OF 2.50" D.J. POLY HOSE

BED 5
200' OF 2.50" D.J. POLY HOSE

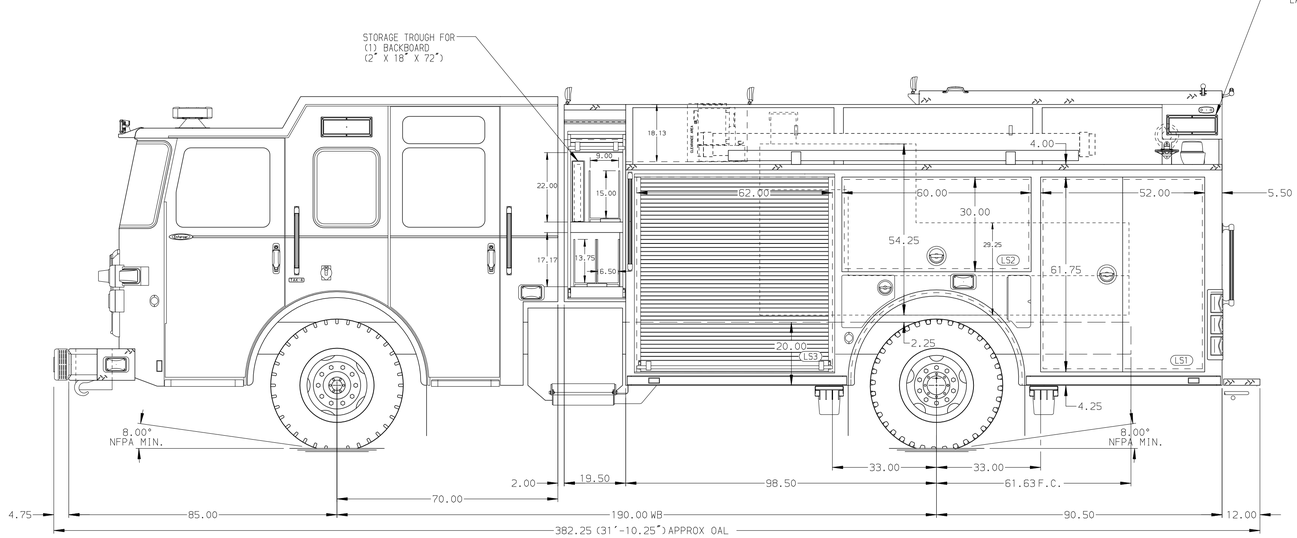

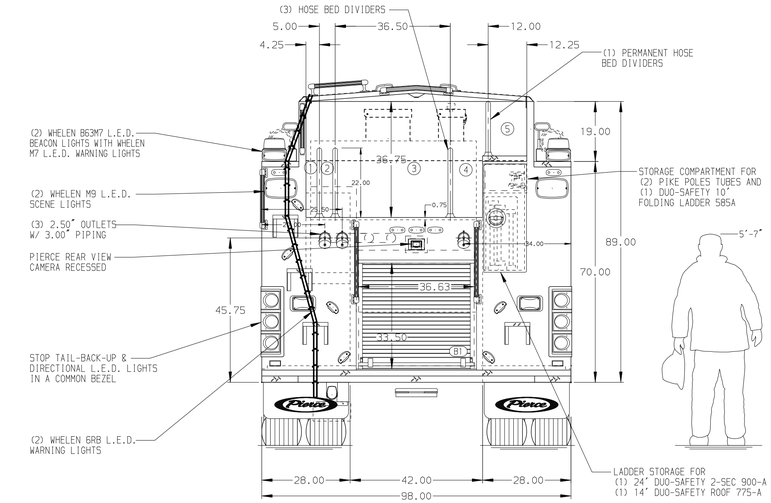

Pierce MANUFACTURING INC.

JOB NO.	34568
SCALE	1:24
DATE	02DEC19
DRAWN BY	COL
CHECKED BY	KBO
SHEET SIZE	D
SHEET NO.	1 OF 1

TITLE: Pierce PUC Pumper Approval Drawing
–

FOR: Bangor Fire Department
–

CHASSIS DATA

MAKE: PIERCE

MODEL: ENFORCER

DWG NO.: 34568AD

REV	DATE	BY	CH
B	26FEB20	COL	DTS
A	10JAN20	LME	DTS

NOTE

DIMENSIONS SHOWN ARE APPROXIMATE AND ARE SUBJECT TO MINOR DEVIATIONS AS MAY OCCUR OR BE NECESSARY IN CONSTRUCTION.
MINOR DETAILS NOT SHOWN.

1. ONE 1.50 OUTLET WITH 2.00 PIPING AND SWIVEL LOCATED IN CENTER BUMPER TRAY
2. SHORELINE RECEPTACLE LOCATED ON DRIVER SIDE OF THE CAB
3. AIR INLET WITH DISCONNECT COUPLING IN THE DRIVER SIDE STEPWELL
4. BATTERY CHARGER LOCATED BEHIND DRIVER'S SEAT
5. BATTERY CHARGE INDICATOR LOCATED ON THE DRIVER SIDE SEAT RISER
6. ADJUSTABLE SHELVES LOCATED PER SHOP ORDER
7. FLOOR MOUNTED SLIDE-OUT TRAYS LOCATED PER SHOP ORDER
8. SLIDE-OUT TOOLBOARDS LOCATED PER SHOP ORDER
9. ONE 120V DUPLEX RECEPTACLES LOCATED PER SHOP ORDER

View File Created 27-FEB-2020 09:31:29