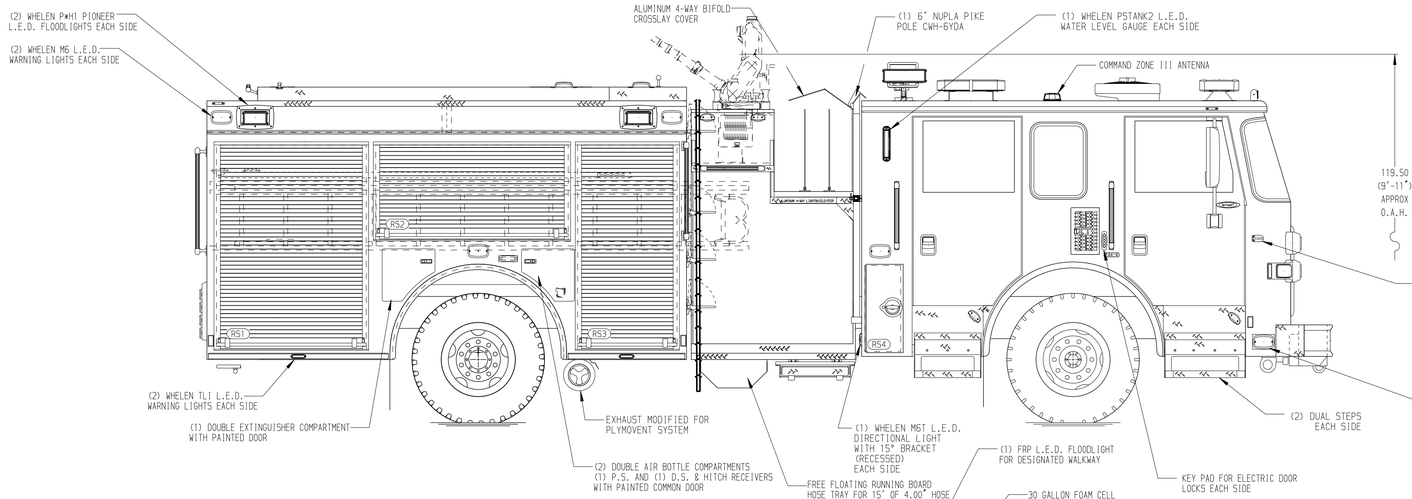


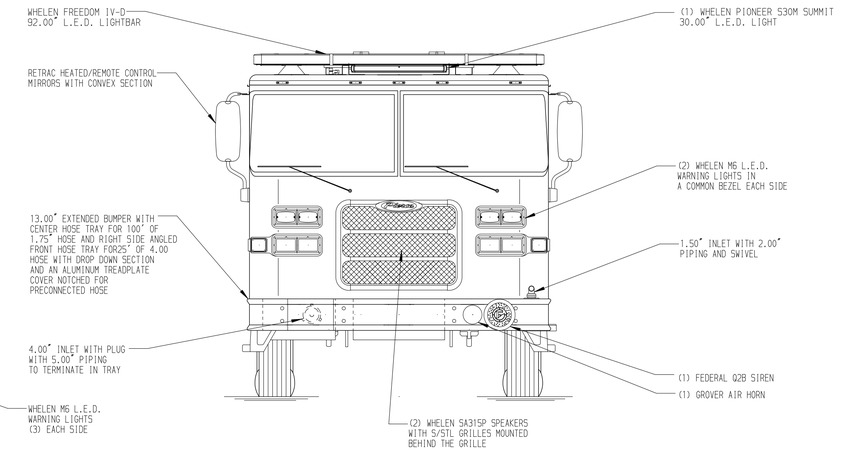


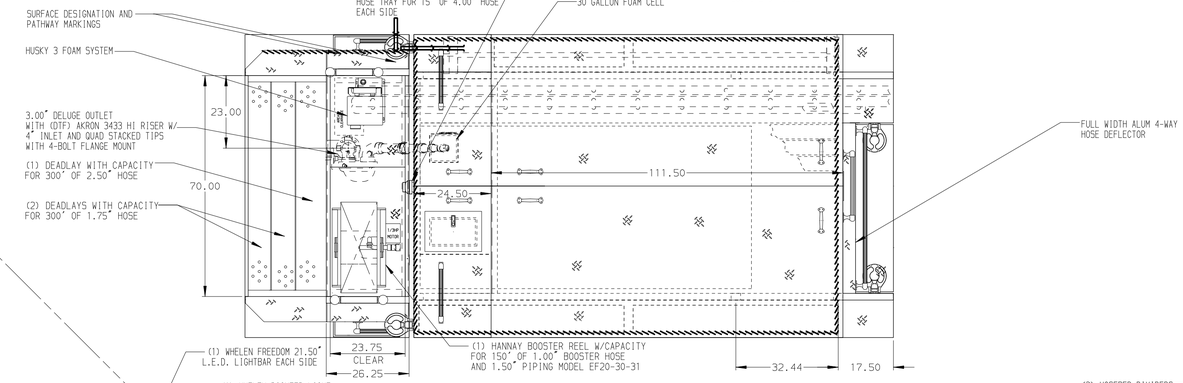


HOSEBED CAPACITIES

1. 800' OF 4.00" D.J. POLY HOSE
2. 800' OF 2.50" D.J. POLY HOSE
3. 200' OF 1.50" D.J. POLY HOSE

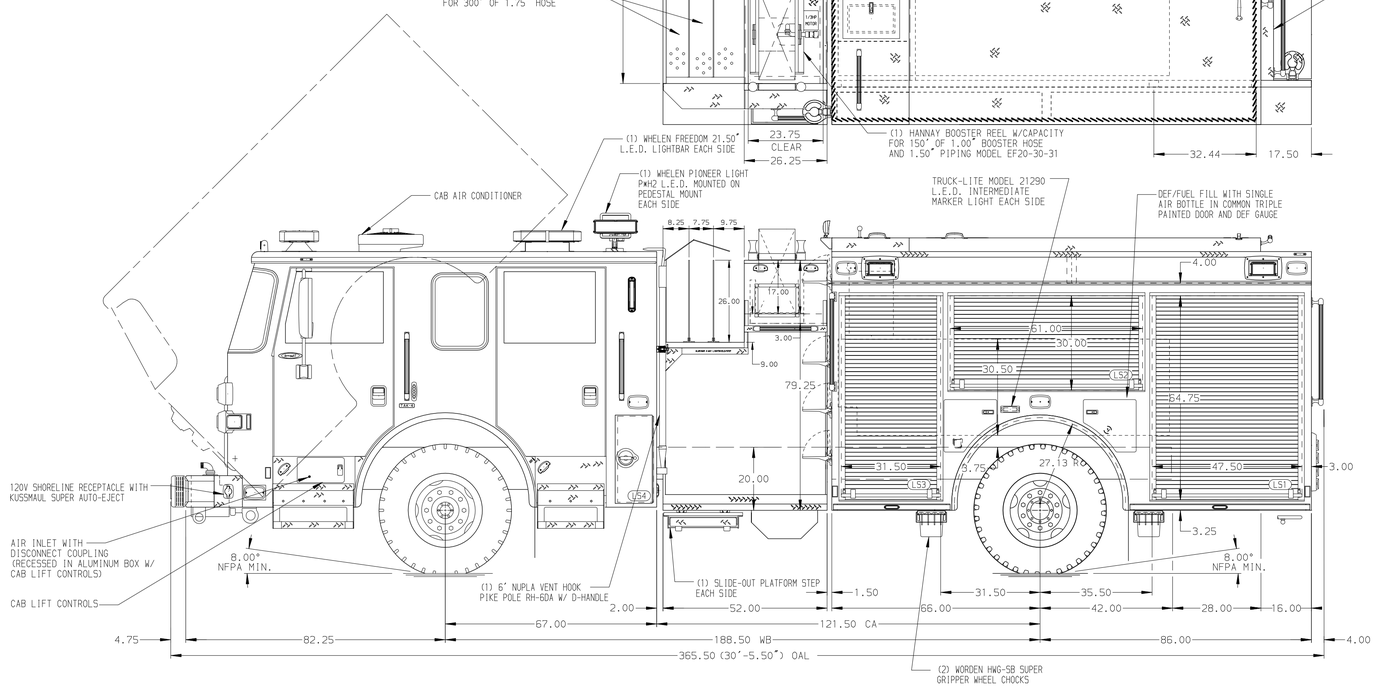


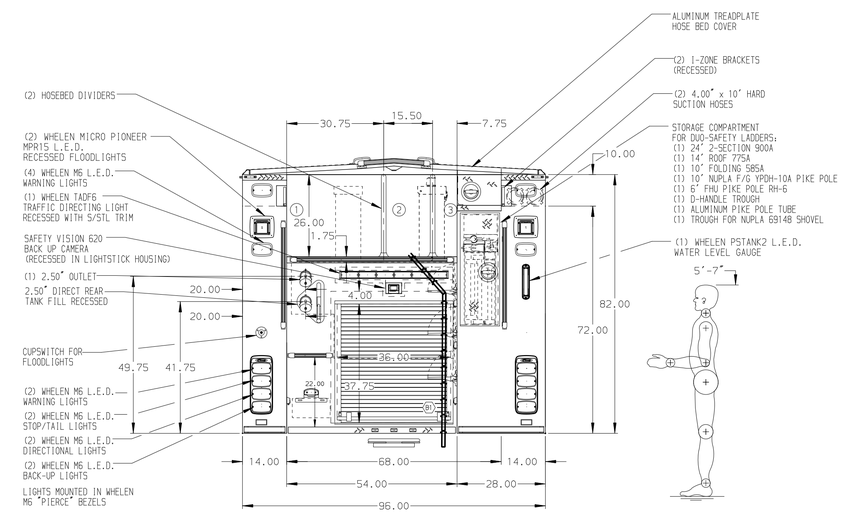


ALUMINUM BODY

SIDE ROLL AND FRONTAL IMPACT PROTECTION

NOTE

DIMENSIONS SHOWN ARE APPROXIMATE AND ARE SUBJECT TO MINOR DEVIATIONS AS MAY OCCUR OR BE NECESSARY IN CONSTRUCTION.
MINOR DETAILS NOT SHOWN.

1. TWO AIR OUTLETS WITH SHUT-OFF VALVES LOCATED ON DRIVER'S SIDE PUMP PANEL
2. BATTERY CHARGER LOCATED BEHIND DRIVER'S SEAT
3. BATTERY CHARGE INDICATOR LOCATED ON DRIVER'S SEAT WITH BRACKET
4. DRIP PAN GUARD FOR ROLL-UP DOOR LOCATED IN COMPARTMENT LS1, LS2, LS3, RS1, RS2, RS3 & B1
5. ONE ADJUSTABLE FULL WIDTH/DEPTH SHELF IN COMPARTMENT RS2, RS3, B1, TWO IN LS1, LS3, THREE IN RS1
6. ONE ADJUSTABLE FULL WIDTH/SPECIAL DEPTH IN COMPARTMENT LS1
7. ONE FLOOR MOUNTED SLIDE-OUT TRAY IN COMPARTMENT B1
8. ONE SWING-OUT ALUMINUM TOOL BOARD IN COMPARTMENT LS2
9. CTECH DRAWER ASSEMBLY IN COMPARTMENT LS3
10. ONE ZICO SCBA HOLDER BRACKET LOCATED LS1, RS3, TWO SHIPPED LOOSE
11. VERTICAL PARTITION LOCATED IN COMPARTMENT LS1
12. PARTITION BETWEEN COMPARTMENTS LS1/B1 AND RS1/B1
13. REMOVABLE DUST FILTER IN COMPARTMENTS LS4, RS4 & B1
14. NO LOUVERS IN ALL COMPARTMENTS EXCEPT B1
15. ONE 120V NEMA DUPLEX RECEPTACLE IN COMPARTMENT RS1
16. BRUSHED S/STL ON COMPARTMENT FLOOR OF RS1

| REV | DATE | BY | CH |
|---|---|---|---|
| 7 | 17FEB20 | LME | MSA |
| 6 | 15JAN20 | LME | MSA |
| 5 | 02DEC19 | LME | SMA |

| | |
|---|---|
| CHASSIS DATA | |
| MAKE | PIERCE |
| MODEL | ARROW XT |
| TITLE | 1500-D-500P,W/30 G FOAM CELL, 152" D.S. FH P.S. FHFD (3)DEADLAYS,LADDERS BETWEEN TANK AND S.SHEET, DELUGE |
| FOR | GLENDALE FIRE DEPARTMENT GLENDALE, CALIFORNIA |
| DWG NO. | 34565AD |

Pierce MANUFACTURING INC.

| | |
|---|---|
| JOB NO. | 34565 01-02 |
| SCALE | 1:24 |
| DATE | |
| DRAWN BY | LME 21NOV19 |
| CHECKED BY | CDU 25NOV19 |
| SHEET SIZE | D |
| SHEET NO. | 1 OF 1 |

View File Created 17-FEB-2020 12:23:33