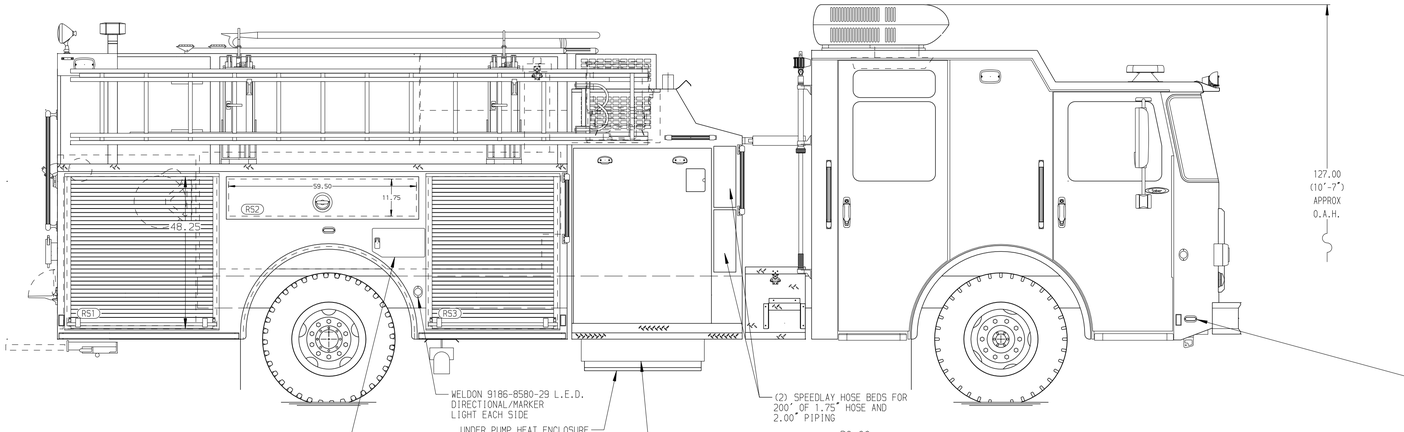


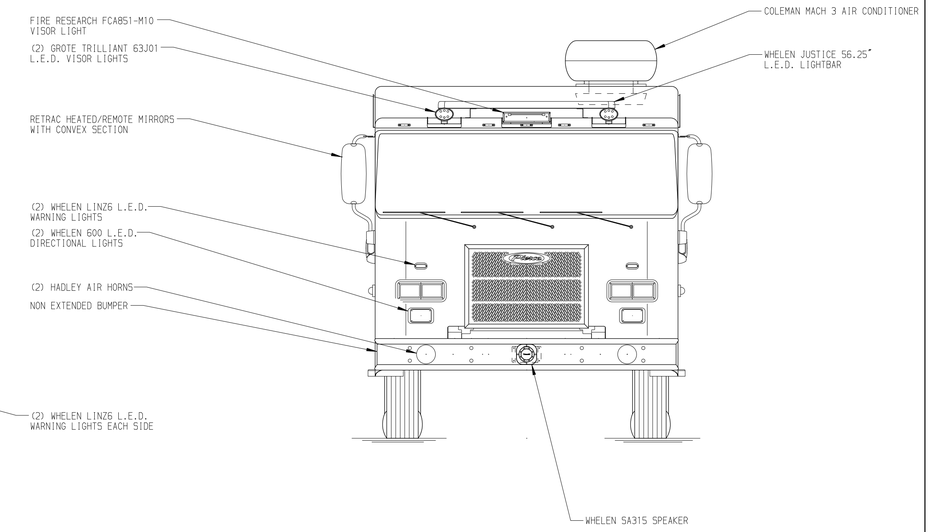


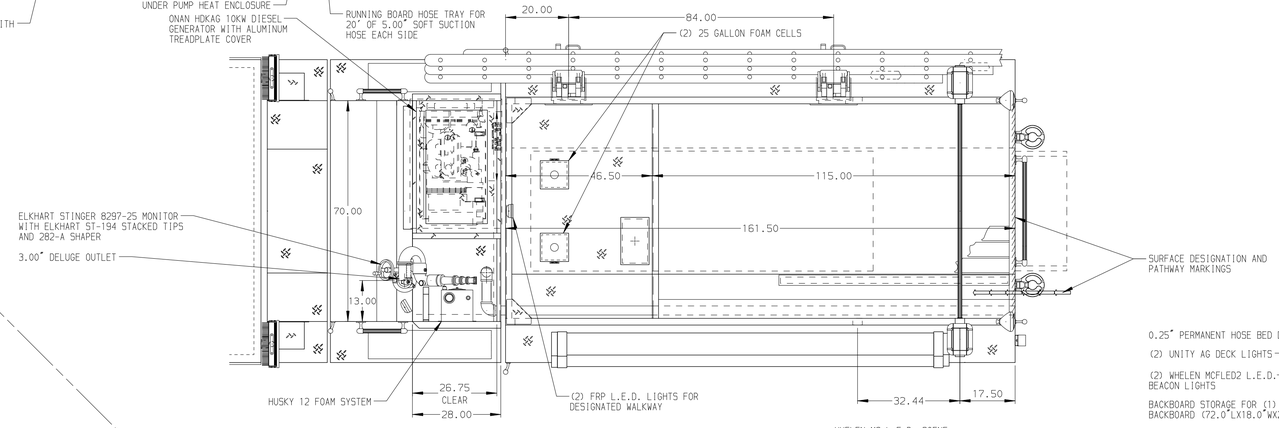


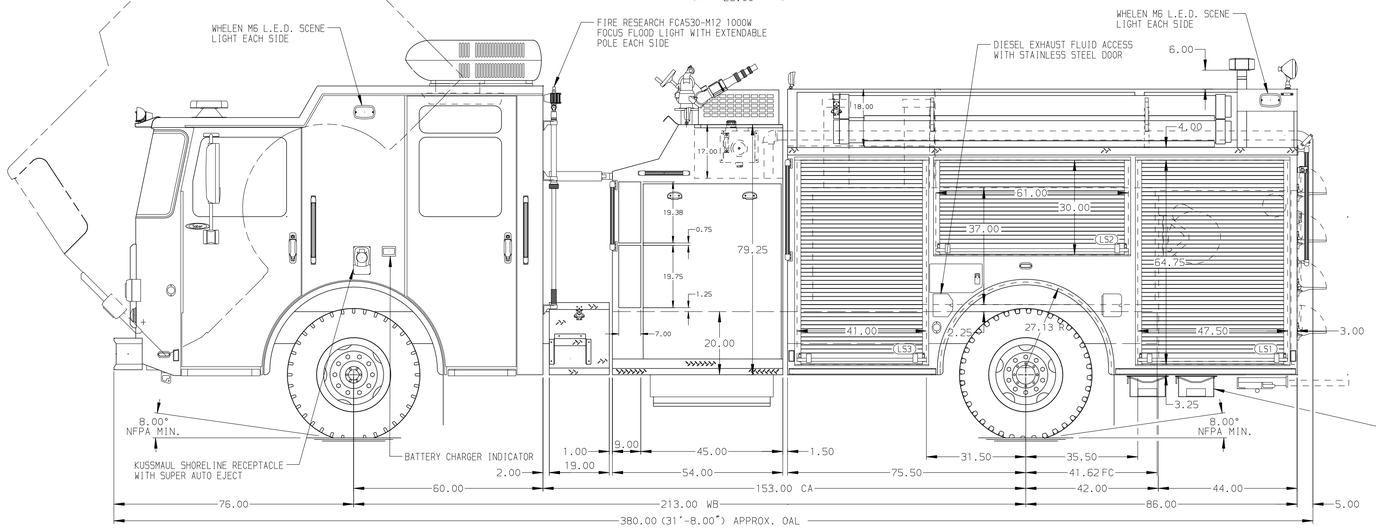


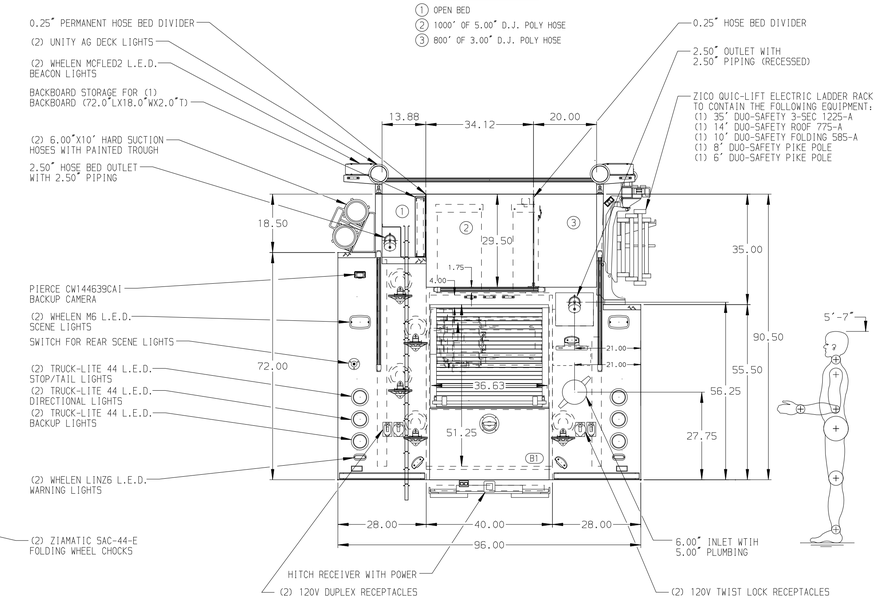


ALUMINUM BODY

MAXIMUM O.A.H. 148.00"

MAXIMUM O.A.L. 380.00"

NOTE

DIMENSIONS SHOWN ARE APPROXIMATE AND ARE SUBJECT TO MINOR DEVIATIONS AS MAY OCCUR OR BE NECESSARY IN CONSTRUCTION.
MINOR DETAILS NOT SHOWN.

1. AIR INLET WITH KUSSMAUL AIR EJECT LOCATED IN DRIVER SIDE STEP WELL
2. AIR OUTLET WITH SHUT OFF VALVE LOCATED AT DRIVER SIDE PUMP PANEL
3. BATTERY CHARGER LOCATED IN COMPARTMENT-LS3
4. SUB-FEED CIRCUIT BREAKER PANEL IN COMPARTMENT-LS3
5. PULL STRAPS FOR DOORS IN COMPARTMENT-LS1,LS2,LS3,RS2
6. ONE FULL WIDTH/DEPTH ADJUSTABLE SHELF WITH SIDES IN COMPARTMENT-LS1,LS3,RS1,RS3; TWO IN B1
7. ONE ADJUSTABLE TILT/SLIDE-OUT TRAY IN COMPARTMENT- LS2,LS3,RS3; TWO IN LS1
8. CIRCUIT BREAKER PANEL LOCATED IN COMPARTMENT-LS3
9. ONE HANNAY ECR1616-17-18 3-WIRE ELECTRIC REWIND CORD REEL WITH 200' OF 12/3 CABLE IN COMPARTMENT-B1

| REV | DATE | BY | CH |
|---|---|---|---|
| 1 | 11FEB20 | KLE | PJP |
| 2 | 15JAN20 | KLE | PJP |
| 3 | 22NOV19 | KLE | NPE |

CHASSIS DATA
MAKE: PIERCE
MODEL: SABER FR

Pierce MANUFACTURING INC.

TITLE: 1250-D-500P W/(2) 25 GAL. FOAM CELLS,DELUGE 161" PUMPER RESCUE BODY,ZICO LADDER RACK,GENERATOR

FOR: UNITED STATES AIR FORCE-SHAW PIERCE DIRECT

DWG NO.: 34539AD

| | |
|---|---|
| JOB NO. | 34539 |
| SCALE | 1:24 |
| DATE | |
| DRAWN BY | KLE 19NOV19 |
| CHECKED BY | NPE 20NOV19 |
| SHEET SIZE | D |
| SHEET NO. | 1 OF 1 |

View File Created 18-FEB-2020 14:01:55