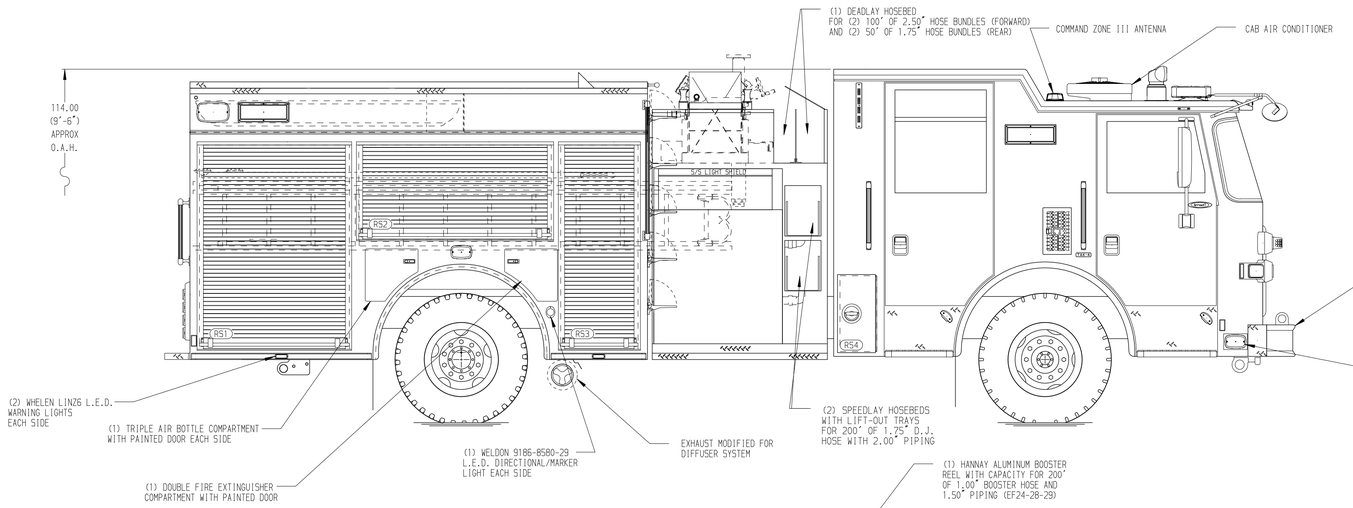

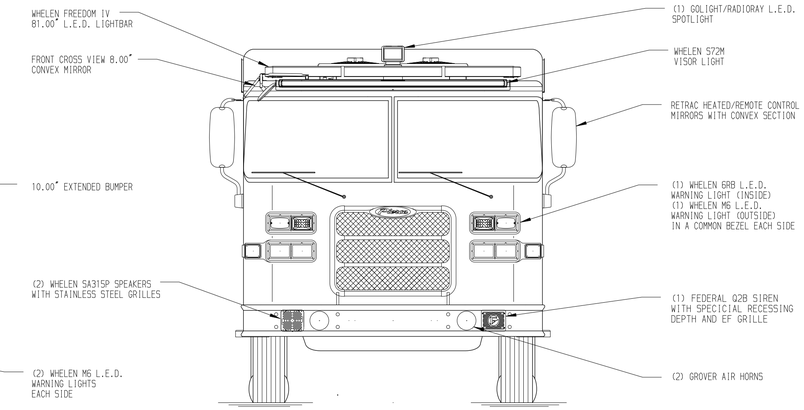

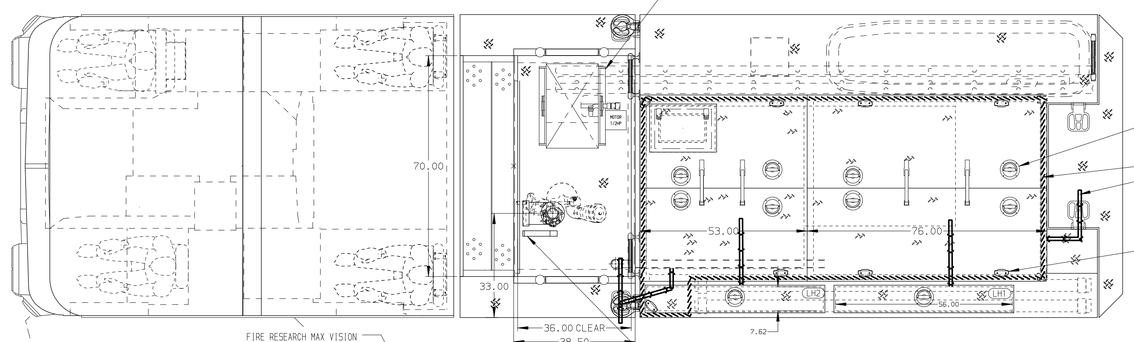

ALUMINUM TREADPLATE
4-SECTION HOSEBED COVER

SURFACE DESIGNATION AND
PATHWAY MARKINGS

(8) P25 L.E.D LIGHTS
FOR DESIGNATED WALKWAY

HOSEBED CAPACITIES
1. 200' OF 2.50" HOSE IN A POLY TRAY
2. 200' OF 1.75" HOSE
3. 1000' OF 4.00" HOSE
4. 800' OF 2.50" HOSE

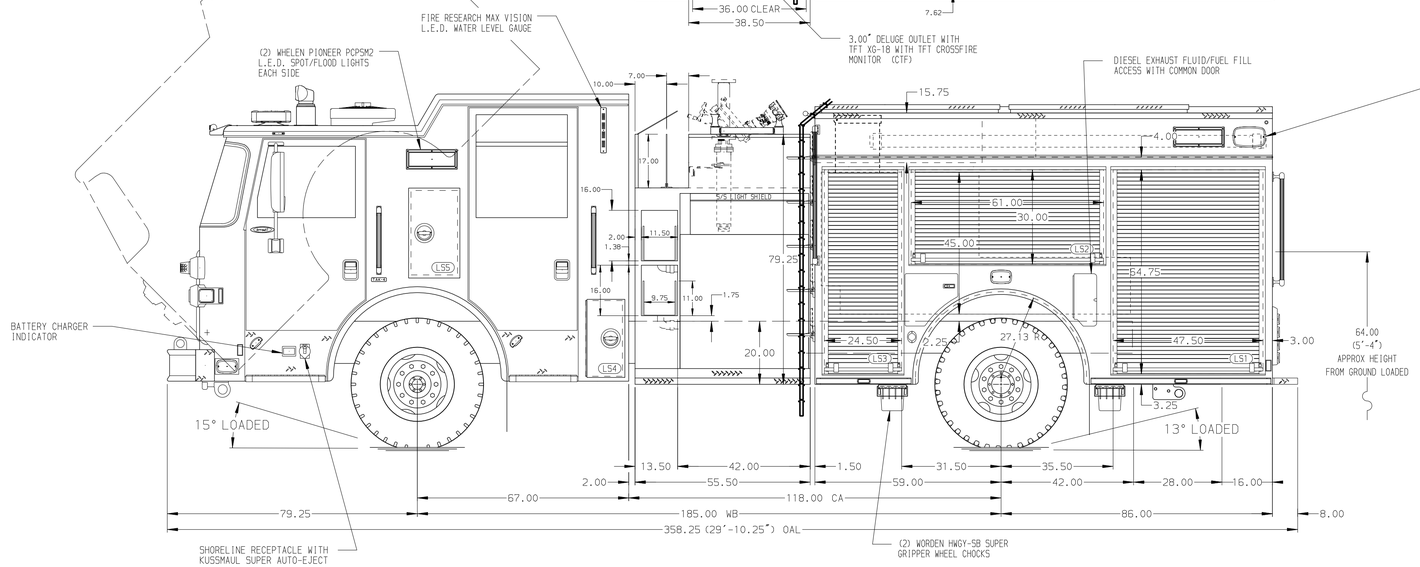

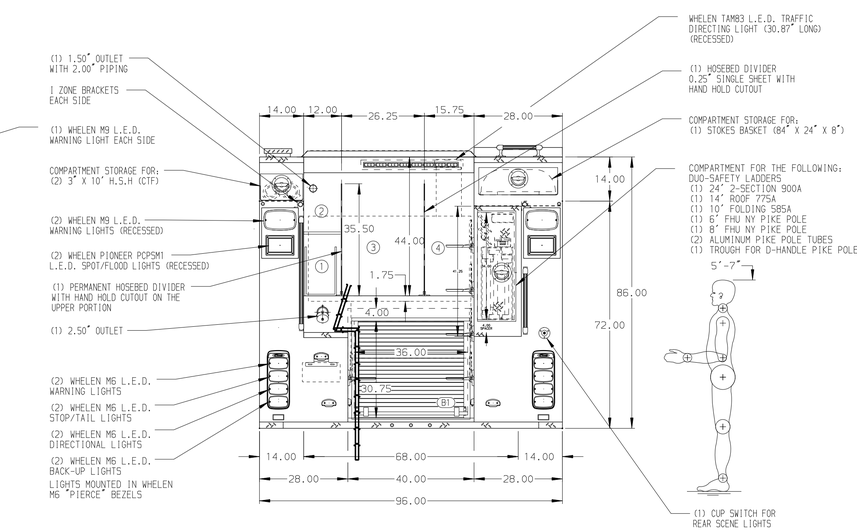

ALUMINUM BODY | MAXIMUM O.A.L. 372.00" | MAXIMUM O.A.H. 114.00" | SIDE ROLL AND FRONTAL IMPACT PROTECTION

NOTE

DIMENSIONS SHOWN ARE APPROXIMATE AND ARE SUBJECT TO MINOR DEVIATIONS AS MAY OCCUR OR BE NECESSARY IN CONSTRUCTION.
MINOR DETAILS NOT SHOWN.

1. DRIP PAN GUARD FOR ROLL-UP DOOR LOCATED LS1, LS2, LS3, RS1, RS2, RS3, & B1
2. ONE FULL WIDTH/DEPTH ADJUSTABLE SHELFS IN COMPARTMENT LS2 TWO IN LS1, LS3, & RS1 THREE IN RS3
3. ONE FLOOR MOUNTED SLIDE-OUT TRAY IN COMPARTMENT R1 & B1
4. SWING-OUT TOOL BOARD WITH PEGBOARD PATTERN IN COMPARTMENT RS2
5. CTECH (3) DRAWER ASSEMBLY IN COMPARTMENT LS3
6. PARTITION BETWEEN COMPARTMENTS LS1/B1 AND RS1/B1
7. ONE VERTICAL PARTITION IN COMPARTMENT LS1 & LS2
8. ALUMINUM PEGBOARD WITH TRACKS ON THE BACK WALL OF COMPARTMENT RS2
9. AIR BOTTLE HOLDER IN COMPARTMENT LS2
10. 120V DUPLEX RECEPTACLE LOCATED LS1 & RS3
11. AIR INLET/OUTLET WITH DISCONNECT FITTING LOCATED ON DS PUMP PANEL

REV	DATE	BY	CH
7	11MAR20	MMF	CHR
6	05FEB20	MMF	CHR
5	26NOV19	MMF	NPE
4	14NOV19	MMF	NPE

CHASSIS DATA	TITLE: 1500-D-500P 145"BODY, FH FRONT & REAR, FDLER (LS) RESCUE (RS), (2)SPEEDLAYS, (2)DEADLAYS, DELUGE
MAKE: PIERCE	FOR: HUMBOLDT BAY FIRE HUMBOLDT BAY, CALIFORNIA
MODEL: ARROW XT	DWG NO.: 34513AD

Pierce MANUFACTURING INC.

JOB NO.	34513 01-02
SCALE 1:24	DATE
DRAWN BY MMF	06NOV19
CHECKED BY NPE	08NOV19
SHEET SIZE D	SHEET NO. 1 OF 1

View File Created 13-MAR-2020 07:23:49