RIGHT SIDE COMPARTMENTS CONTAIN THE FOLLOWING:

COMPARTMENT RS1 CONTAINS:
- (1) OIL DRY HOPPER
- (2) STD DEPTH FLOOR MOUNTED TRAYS WITH TOOLBOARDS
-
-
-

COMPARTMENT RS2 CONTAINS:
- (1) 12V WINCH POWER RECEPTACLE
- (1) RACK FOR 7 AIR BAGS
- (1) VERTICAL COMPARTMENT DIVIDER
- (2) STD DEPTH ADJ SHELF

COMPARTMENT RS3 CONTAINS:
- (1) HORIZONTAL FLOOR EXTENSION
- (1) 1/2 DEPTH ADJ SHELF
- (1) 2-WAY ADJ SHELF
- (1) STD DEPTH FLOOR MOUNTED TRAY
- (1) 1/2 DEPTH ADJ SLIDE OUT TOOLBOARD
- (1) 2-WAY FLOOR MTD SLIDE OUT TRAY
- (1) VERTICAL COMPARTMENT DIVIDER
- (1) ELECTRIC CORD REEL WITH 200' OF 10/3 YELLOW CORD
-

COMPARTMENT RS4 CONTAINS:
- (1) REINFORCED HORIZONTAL DIVIDER
- (1) VERTICAL COMPARTMENT DIVIDER
- (1) 2-WAY ADJ SLIDE OUT TOOLBOARD
- (1) 1/2 DEPTH ADJ SHELF
- (1) STD DEPTH FLOOR MOUNTED TRAY
- (1) HORIZONTAL FLOOR EXTENSION
-
-
-

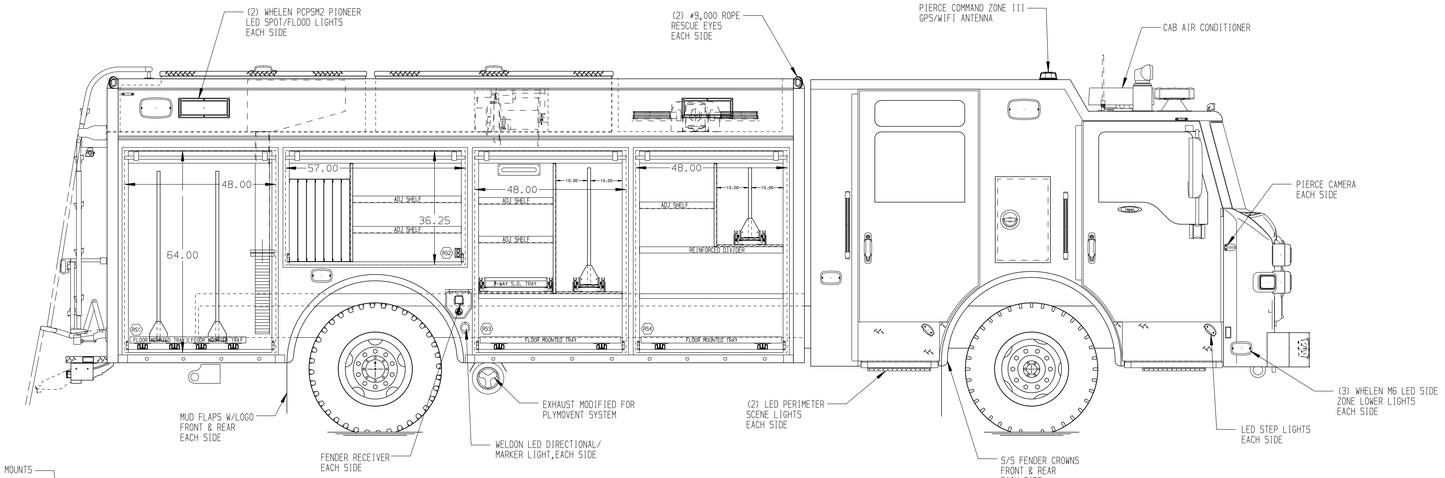

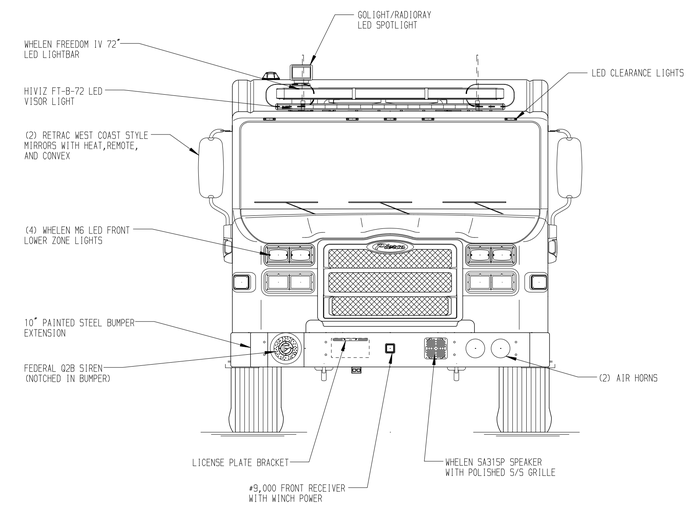

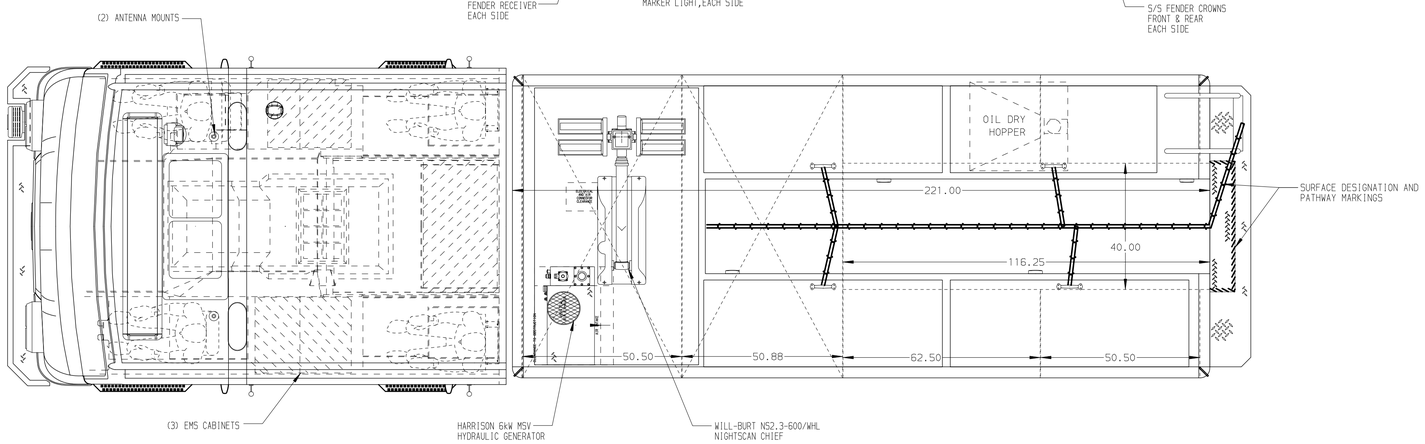

REAR COMPARTMENT CONTAINS THE FOLLOWING:

COMPARTMENT B1 CONTAINS:
- (1) 12V WINCH POWER RECEPTACLE
- (1) RACK FOR STOKES BASKET & BACKBOARD
- (1) RACK FOR 2 PIKE POLES
- (1) 110"DP ADJ SLIDE OUT TRAY
-
-
-
-

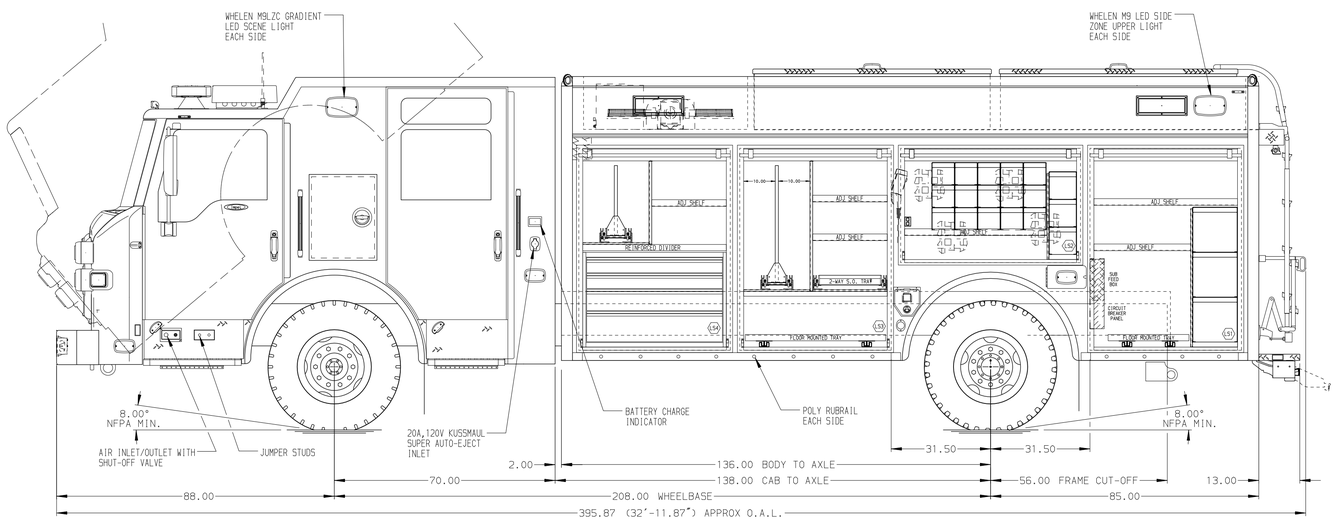

LEFT SIDE COMPARTMENTS CONTAIN THE FOLLOWING:

COMPARTMENT LS1 CONTAINS:
- (1) RACK FOR 3 EXTINGUISHERS
- (2) STD DEPTH ADJ SHELVES
- (1) STD DEPTH FLOOR MOUNTED TRAY
- (1) CIRCUIT BREAKER PANEL
- (1) GENERATOR METER PANEL
- (1) SUBFEED BOX
- (1) 15A,120V DUPLEX RECEPTACLE
-

COMPARTMENT LS2 CONTAINS:
- (1) 12V WINCH POWER RECEPTACLE
- (1) RACK FOR 3 SPECIAL SIZE SCBA BOTTLES
- (1) RACK FOR 15 SCBA BOTTLES (7"x7"SQ.)
- (1) NIGHTSCAN CONTROLLER
- (1) STD DEPTH ADJ SHELF
- CARGO RETENTION NETTING
-

COMPARTMENT LS3 CONTAINS:
- (1) HORIZONTAL FLOOR EXTENSION
- (1) 1/2 DEPTH ADJ SHELF
- (1) 2-WAY ADJ SHELF
- (1) STD DEPTH FLOOR MOUNTED TRAY
- (1) 1/2 DEPTH ADJ SLIDE OUT TOOLBOARD
- (1) 2-WAY FLOOR MTD SLIDE OUT TRAY
- (1) VERTICAL COMPARTMENT DIVIDER
-

COMPARTMENT LS4 CONTAINS:
- (1) IOTA 75 AMP CHARGER
- (1) 4-DRAWER C-TECH CABINET
- (1) REINFORCED HORIZONTAL DIVIDER
- (1) VERTICAL COMPARTMENT DIVIDER
- (1) 2-WAY ADJ SLIDE OUT TOOLBOARD
- (1) 1/2 DEPTH ADJ SHELF

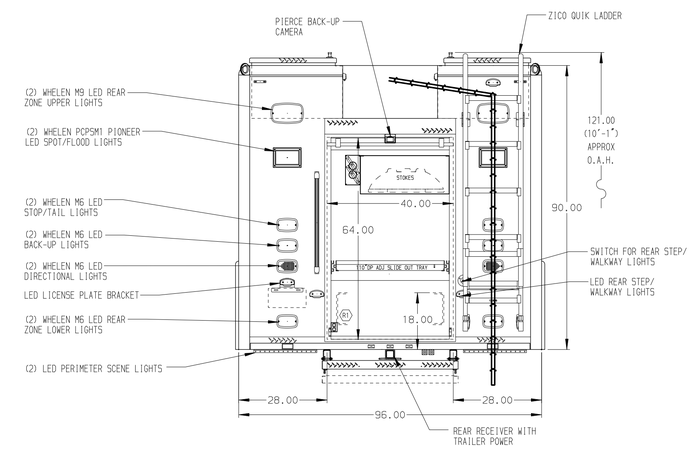

NOTE

DIMENSIONS SHOWN ARE APPROXIMATE AND ARE SUBJECT TO MINOR DEVIATIONS AS MAY OCCUR OR BE NECESSARY IN CONSTRUCTION.
MINOR DETAILS NOT SHOWN.

NOTES:
1. ONSPOT AUTOMATIC TIRE CHAINS
2. POLISHED S/S SCUFFPLATES ON CAB DOOR JAMBS
3. FLOOR IN CAB AND CREW CAB TO BE ALUMINUM TREADPLATE
4. BATTERY CHARGE INDICATOR LOCATED ON DRIVER'S SEAT WITH BRACKET
5. PIERCE LED LIGHTS IN ALL BODY AND HATCH COMPARTMENTS
6. (2) 20A,120V 6-PLACE RECEPTACLE STRIPS IN THE FORWARD FACING EMS CABINET
7. (2) 15/20A,120V DUPLEX RECEPTACLES IN FORWARD FACING EMS CABINET

SIDE ROLL AND FRONTAL IMPACT PROTECTION

CLEAR DOOR WIDTH KEY

AMDOR ROLL UP DOORS:	-2 1/4"
GORTITE ROLL UP DOORS:	-2 1/2"
PIERCE DOUBLE LAP DOORS:	-4 1/4"
PIERCE LIFT-UP LAP DOORS:	-1 1/2"
(EX: 60"F-F - 2 1/4"= 57 3/4" CLEAR) (F-F)= FRAME TO FRAME	

REV	DATE	BY	CH
5	05MAY20	DHE	CDK
4	10MAR20	DHE	CDK
3	12FEB20	DHE	CDK

CHASSIS DATA
MAKE: PIERCE
MODEL: IMFR7010

Pierce MANUFACTURING INC.

TITLE: HEAVY DUTY RESCUE NON-WALKIN
FOR: HAVERHILL MA FIRE DEPARTMENT HAVERHILL,MA
PATRICK WHITNEY
DWG NO.: 34499AD

JOB NO.	34499
SCALE	1:24
DATE	03FEB20
DRAWN BY	DHE
CHECKED BY	CDK
	3FEB20
SHEET SIZE	D
SHEET NO.	1 OF 1

View File Created 06-MAY-2020 11:07:57