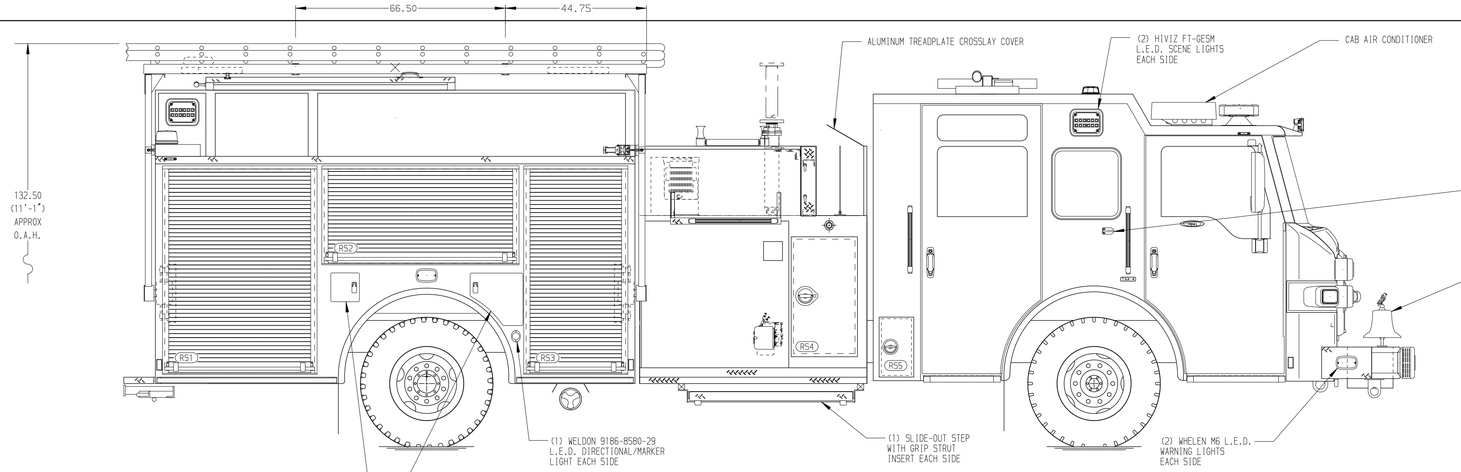

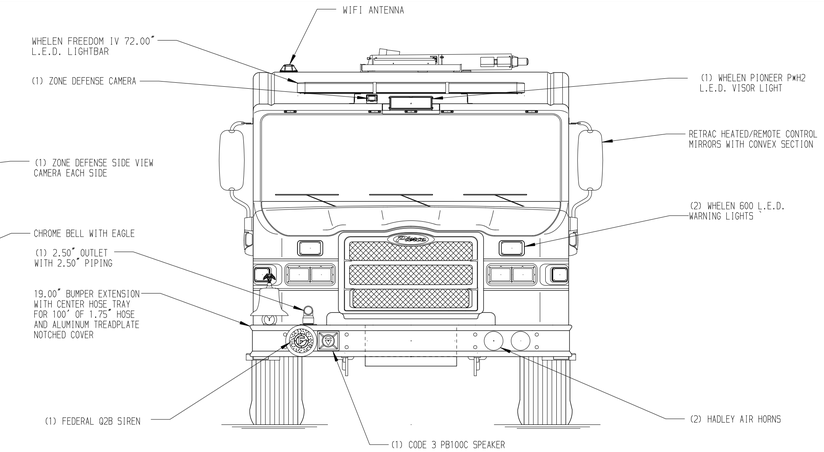

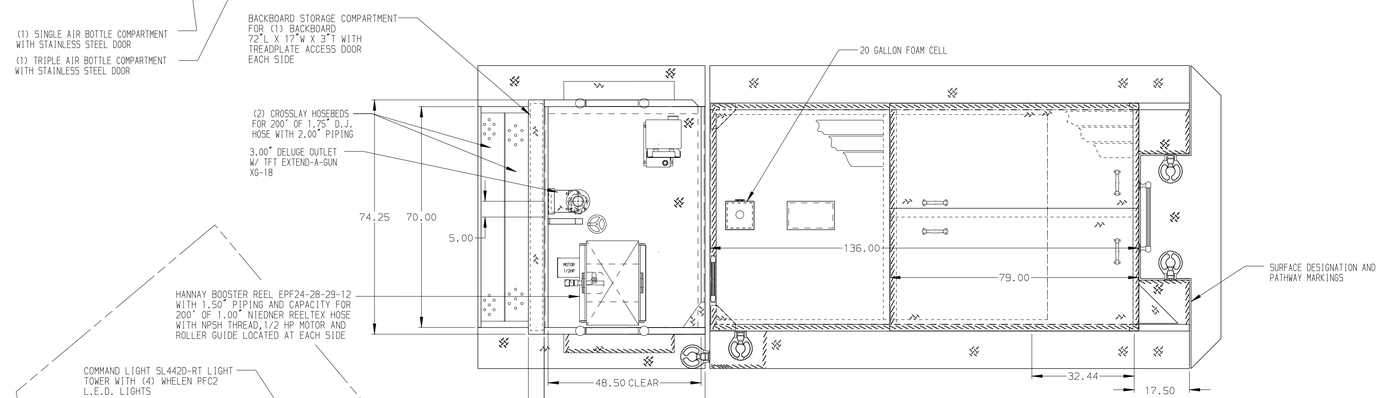

HOSEBED CAPACITIES

1. 300' OF 1.75" D.J. POLY HOSE
2. 200' OF 2.50" D.J. POLY HOSE
3. 600' OF 2.50" D.J. POLY HOSE
4. 1000' OF 5.00" D.J. POLY HOSE

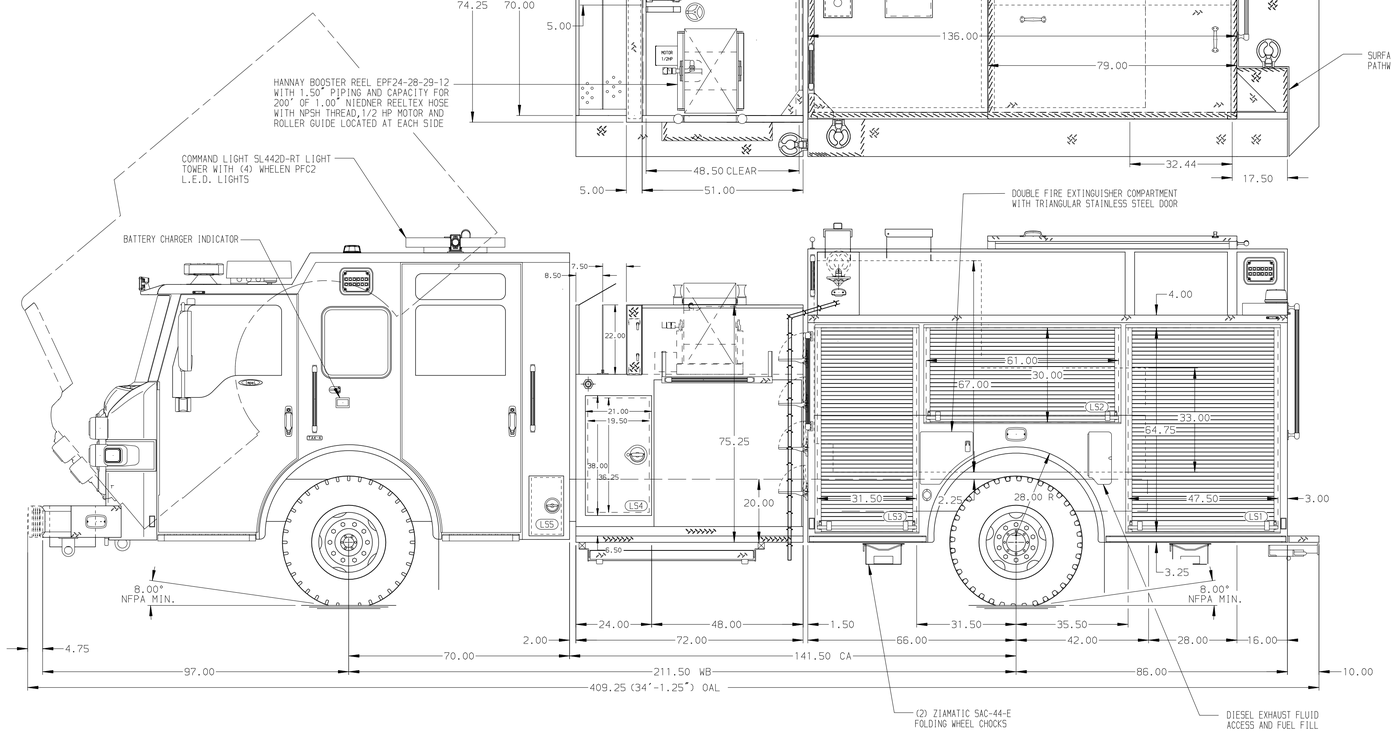

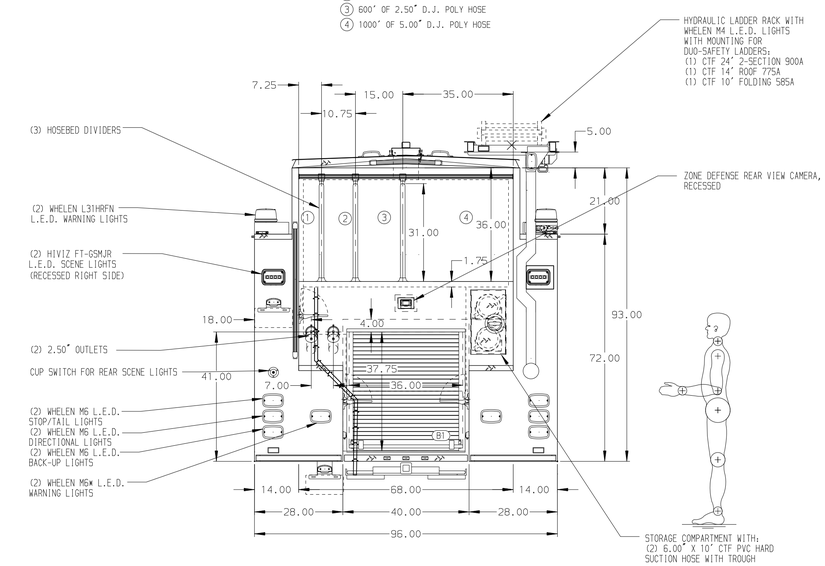

ALUMINUM BODY

SIDE ROLL AND FRONTAL IMPACT PROTECTION

NOTE

DIMENSIONS SHOWN ARE APPROXIMATE AND ARE SUBJECT TO MINOR DEVIATIONS AS MAY OCCUR OR BE NECESSARY IN CONSTRUCTION.
MINOR DETAILS NOT SHOWN.

1. ONSPOT AUTOMATIC TIRE CHAINS TO BE PROVIDED AT REAR
2. AIR INLET W/DISCONNECT COUPLING LOCATED AT THE DRIVER'S SIDE STEP WELL
3. BATTERY CHARGER LOCATED BEHIND DRIVER'S SEAT
4. ONE NEMA STRAIGHT BLADE SHORELINE LOCATED AT THE DRIVER'S SIDE STEP WELL
5. ONE FLOOR MOUNTED SLIDE-OUT TRAY IN COMPARTMENTS LS3, RS1
6. ONE FULL WIDTH/DEPTH ADJUSTABLE SHELF IN LS3, RS2, B1
7. ONE ADJUSTABLE FULL WIDTH/DEPTH SHELF WITH SPECIAL SIDE HEIGHT IN COMPARTMENT RS1
8. ONE ADJUSTABLE HEIGHT SLIDE OUT TRAY WITH 2" SIDES IN COMPARTMENT LS3
9. ONE 120V DUPLEX RECEPTACLE LOCATED IN EACH EMS COMPARTMENT AND BEHIND DRIVERS SEAT
10. COMPARTMENT VENTILATION SYSTEM

REV	DATE	BY	CH
3	29JAN20	LME	LPA
2	20DEC19	MWA	LPA
1	14NOV19	MWA	WKL

CHASSIS DATA
MAKE: PIERCE
MODEL: IMPEL

Pierce MANUFACTURING INC.

TITLE: 1750-D-1020P 1000WATER W/20 GAL FOAM CELL, 152" BODY FULL HEIGHT FRT & RR, FULL DEPTH LOWER EXTENDED RR
FOR: ALBANY FIRE DEPARTMENT ALBANY, OREGON
DWG NO.: 34445AD

JOB NO.	34445
SCALE	1:24
DATE	
DRAWN BY	MWA 11NOV19
CHECKED BY	WKL 12NOV19
SHEET SIZE	D
SHEET NO.	1 OF 1

View File Created 30-JAN-2020 11:26:45