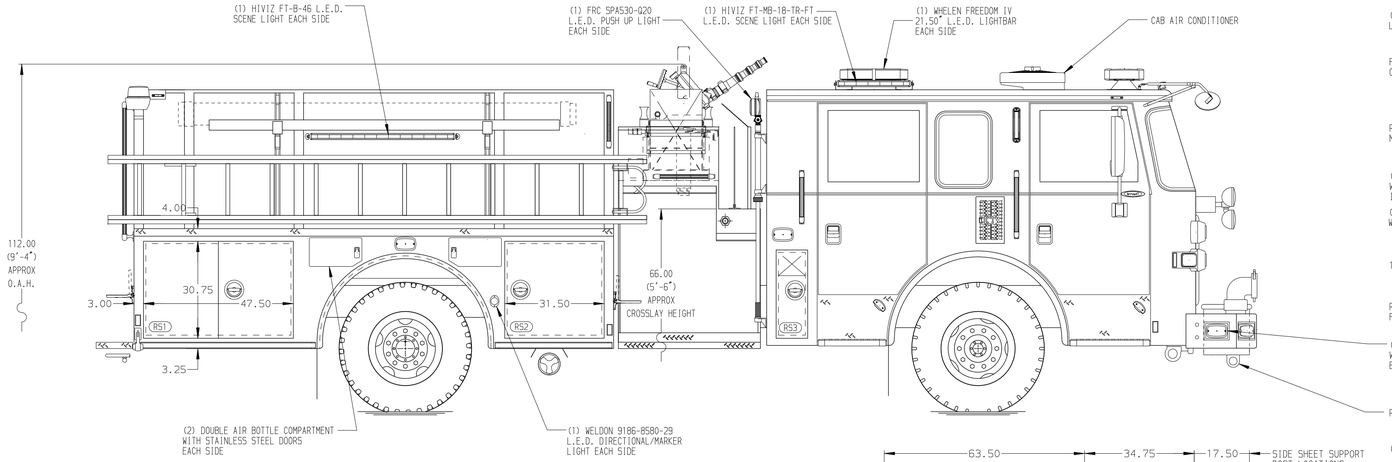

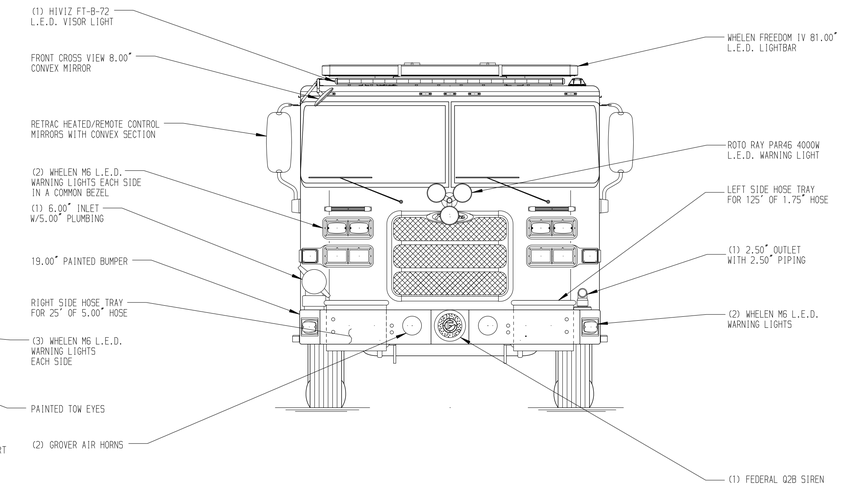

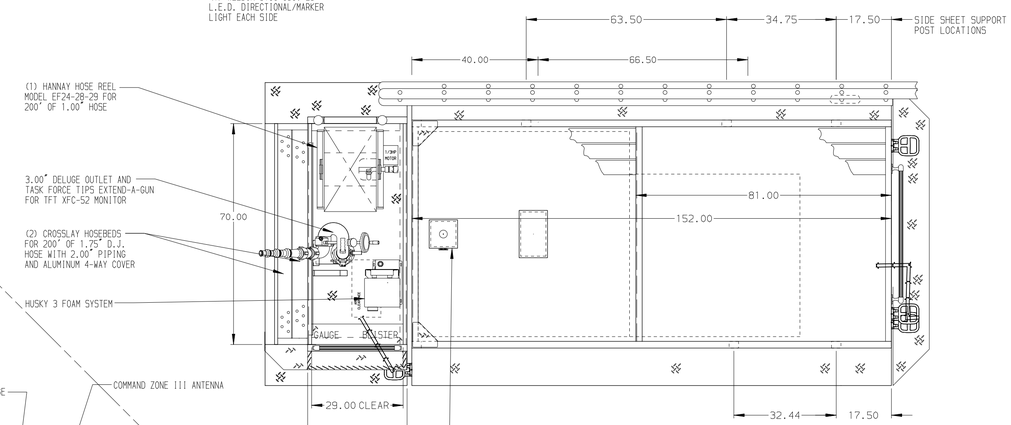

HOSEBED CAPACITIES

1. 240' OF 1.75" D.J. POLY HOSE
2. 400' OF 3.00" D.J. POLY HOSE
3. 1000' OF 4.00" D.J. POLY HOSE
4. 400' OF 2.50" D.J. POLY HOSE
5. 200' OF 1.75" D.J. POLY HOSE

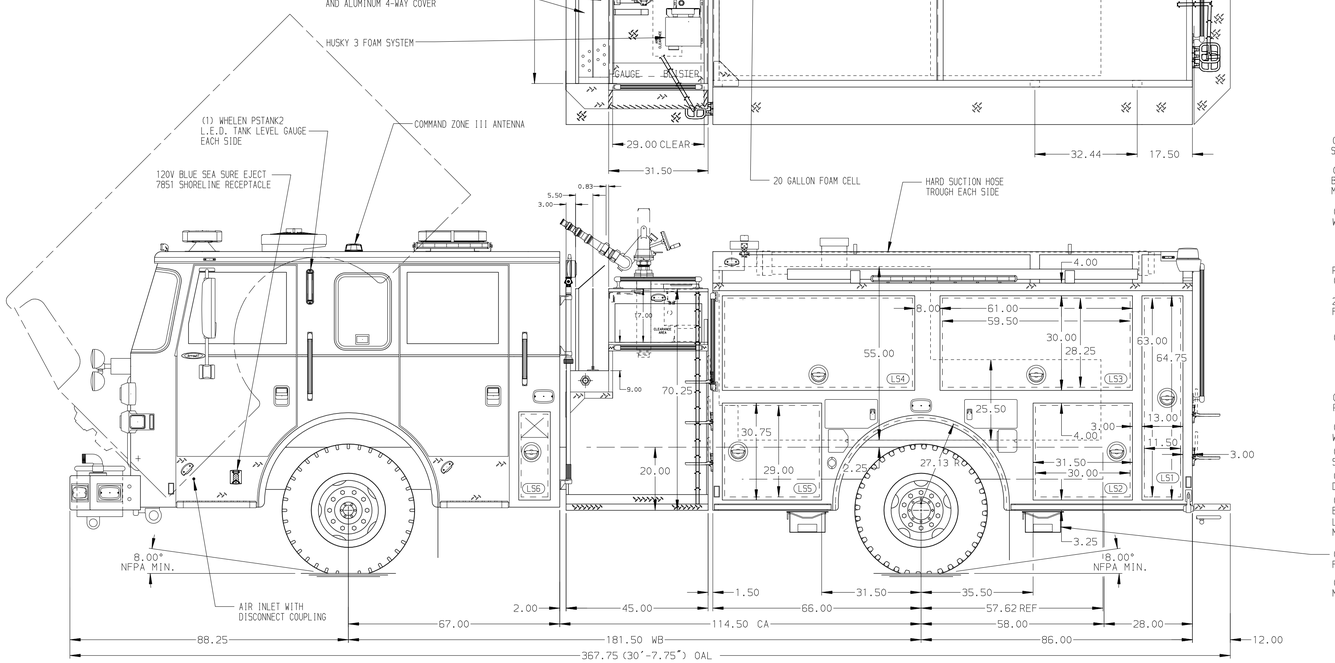

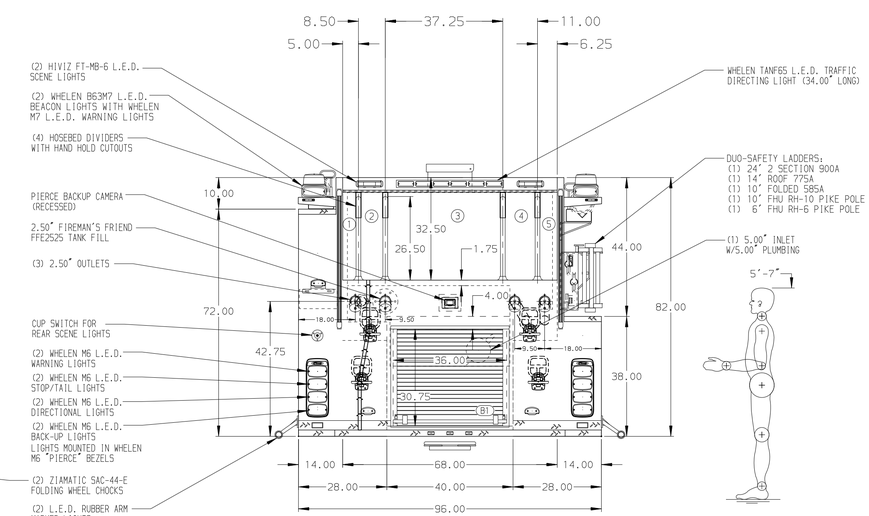

ALUMINUM BODY

SIDE ROLL AND FRONTAL IMPACT PROTECTION

NOTE

DIMENSIONS SHOWN ARE APPROXIMATE AND ARE SUBJECT TO MINOR DEVIATIONS AS MAY OCCUR OR BE NECESSARY IN CONSTRUCTION.
MINOR DETAILS NOT SHOWN.

1. ONSPOT AUTOMATIC TIRE CHAINS TO BE PROVIDED AT REAR
2. BATTERY CHARGER LOCATED BEHIND DRIVER'S SEAT
3. BATTERY CHARGER INDICATOR BEHIND DRIVER'S SEAT DISPLAYED THROUGH WINDOW
4. REVERSED HINGED DOOR ON COMPARTMENT LS5
5. BRUSHED STAINLESS STEEL SCUFFPLATE INSIDE EACH BODY COMPARTMENT DOORS
6. DRIP PAN GUARD FOR ROLL-UP DOOR LOCATED IN COMPARTMENT B1
7. ONE FULL WIDTH/DEPTH ADJUSTABLE SHELF IN COMPARTMENT RS2
8. ONE ADJUSTABLE FULL WIDTH/DEPTH SHELF WITH SPECIAL SIDE HEIGHTS IN COMPARTMENT RS1
9. ONE ADJUSTABLE SLIDE-OUT TRAY IN COMPARTMENT LS2,LS5
10. ONE FULL WIDTH/DEPTH FLOOR MOUNTED SLIDE-OUT TRAY WITH SIDE SLIDES IN COMPARTMENTS RS2,B1
11. ONE VERTICAL DIVIDER IN COMPARTMENT RS2
12. PARTITION BETWEEN COMPARTMENTS LS1/B1 AND RS1/B1
13. ALUMINUM PEGBOARD WITH TRACKS ON THE BACK WALL OF COMPARTMENTS LS1,LS3,LS4
14. 120V DUPLEX RECEPTACLE LOCATED IN COMPARTMENTS LS4,RS2,EMS COMPARMTMENT

REV	DATE	BY	CH
5	07APR20	JWO	CSH
4	17FEB19	JWO	DTS
3	06FEB20	JWO	DTS
2	02JAN19	JWO	DTS
1	300CT19	JWO	KOU

CHASSIS DATA
MAKE: PIERCE
MODEL: ARROW XT

Pierce MANUFACTURING INC.

TITLE: 1500-D-980P W/20G FOAM,152",FULL HEIGHT DS,LOW PS (2) X-LAYS,DELUGE

FOR: AMHERST FIRE DEPARTMENT, AMHERST, VIRGINIA

DWG NO.: 34410AD

JOB NO.	SCALE	DRAWN BY	CHECKED BY	SHEET SIZE	SHEET NO.
34410	1:24	JWO	KOU	D	1 OF 1

DATE: 220CT19 / 240CT19

View File Created 07-APR-2020 13:55:11