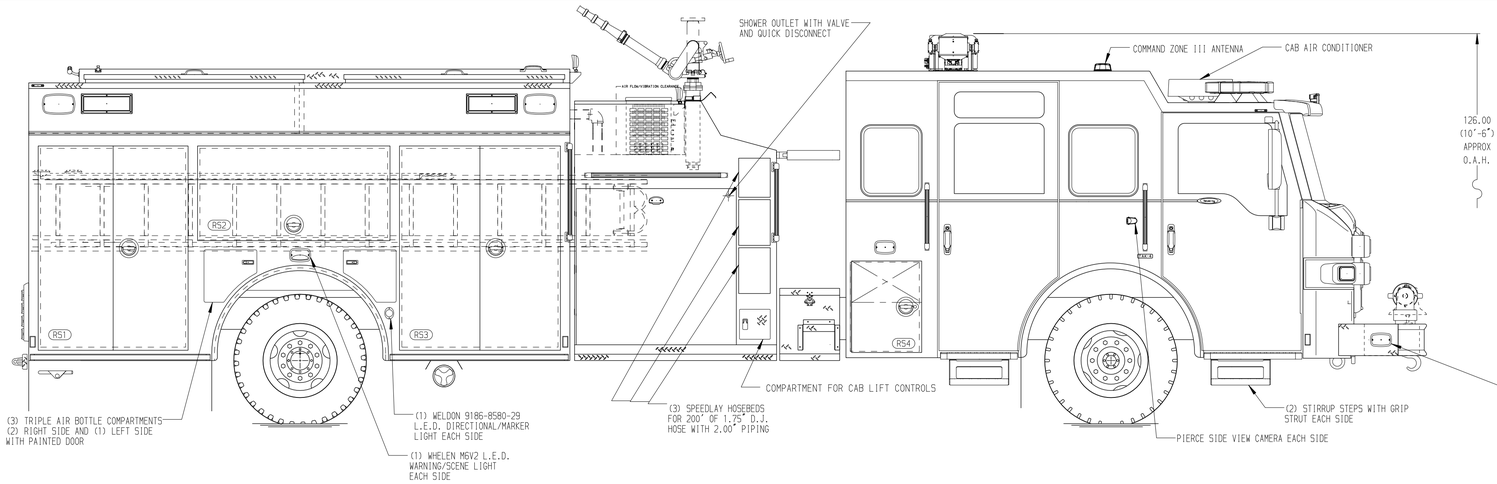

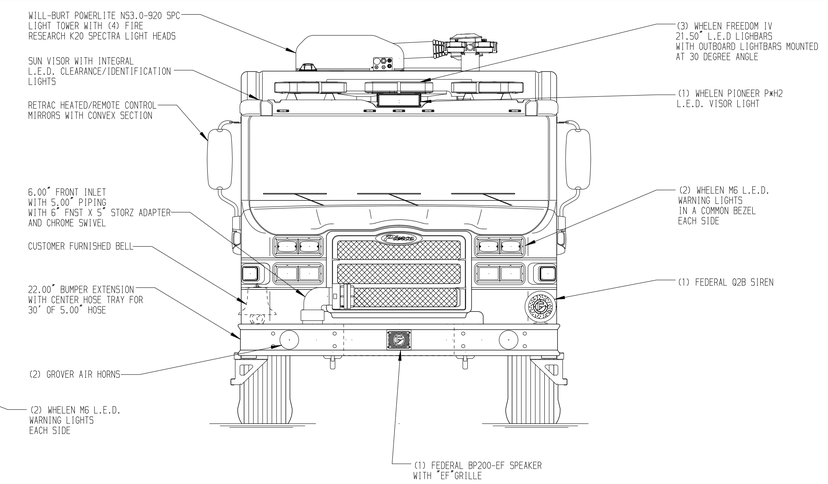

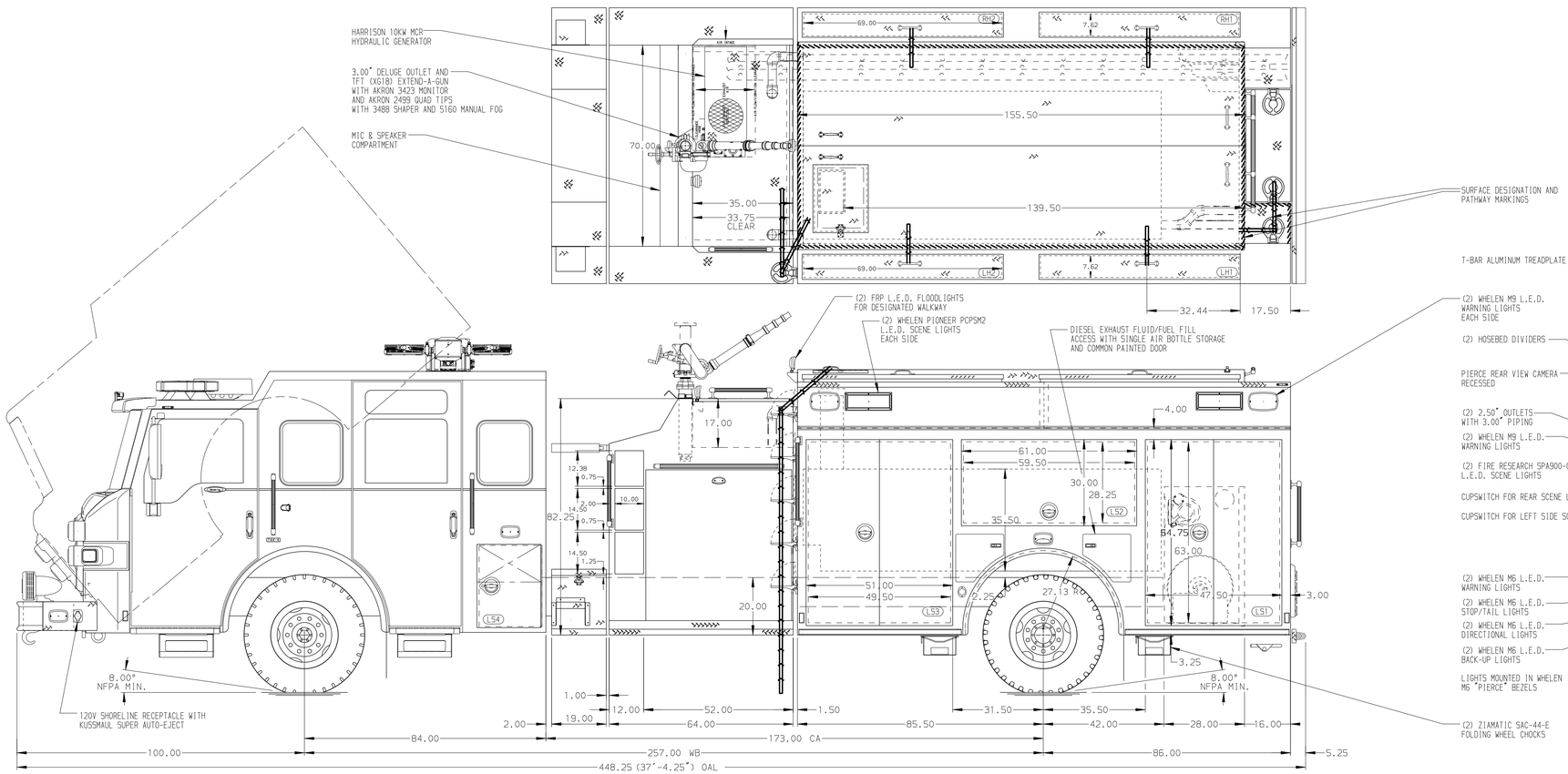

HOSEBED CAPACITIES

1. 250' OF 1.75" DJ POLY HOSE
2. 1500' OF 5.00" LDH RUBBER TPX HOSE
3. 250' OF 2.50" DJ POLY HOSE

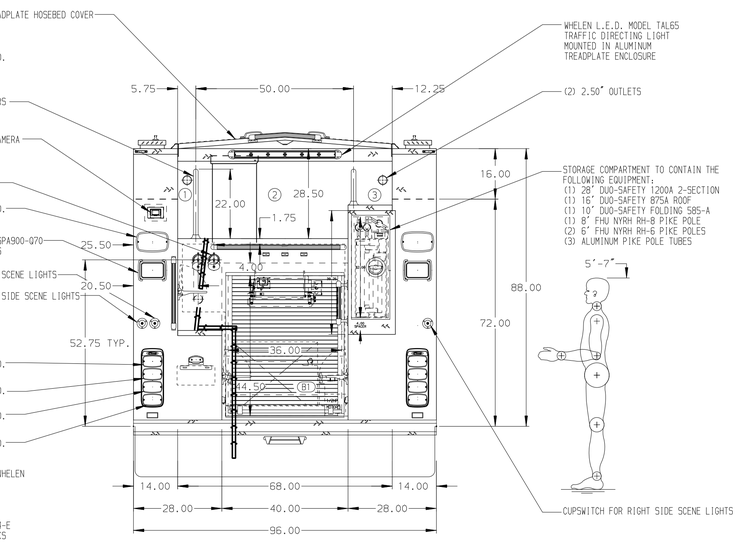

ALUMINUM BODY

NOTE

DIMENSIONS SHOWN ARE APPROXIMATE AND ARE SUBJECT TO MINOR DEVIATIONS AS MAY OCCUR OR BE NECESSARY IN CONSTRUCTION.
MINOR DETAILS NOT SHOWN.

1. RUD AUTOMATIC TIRE CHAINS TO BE PROVIDED AT THE REAR
2. ONE SET OF SUPER Z-SECURITY CHAIN TIRE CHAINS SHIPPED LOOSE
3. AIR INLET WITH DISCONNECT COUPLING ON L.S. STEP WELL
4. AIR OUTLET ON L.S. PUMP PANEL
5. ALUMINUM TREADPLATE ON THE RAISED CAB ROOF
6. BATTERY CHARGER LOCATED BEHIND DRIVER'S SEAT
7. BATTERY CHARGER INDICATOR LOCATED NEAR DRIVER'S SEAT RISER WITH BRACKET
8. BRUSHED STAINLESS STEEL SQUFFPLATE INSIDE EACH BODY COMPARTMENT DOORS
9. DRIP PAN GUARD FOR ROLL-UP DOOR IN B1
10. ONE FULL WIDTH/DEPTH ADJUSTABLE SHELF IN LS1, LS3, B1, RS1, AND RS3
11. FLOOR MOUNTED SLIDE-OUT TRAYS TWO IN LS3 AND ONE IN LS1, RS1, AND RS3
12. ALUMINUM SWING-OUT TOOLBOARD WITH PAC TRAC IN LS2 AND RS2
13. PAC TRAC ON BACK WALL OF LS1, LS2, RS1, RS2, AND RS3
14. CIRCUIT BREAKER PANEL IN LS3
15. HANNAY MODEL ELFCR16-24-10-11-6 ELECTRIC CABLE REEL WITH 150' OF 12/3 CABLE IN B1
16. TWO SENTREX 120V 6-PLACE RECEPTACLE STRIPS LOCATED IN LS1, RS1, AND REAR BULKHEAD SIDE AT TRANSITION POINT
17. HANNAY MODEL SBEF34-23-24 BOOSTER REEL WITH 200' OF 1.00" BOOSTER HOSE IN B1
18. 0.38" ADJUSTABLE SHELF PLATE IN RS3
19. 120V DUPLEX RECEPTACLE IN THE DUNNAGE AREA OVER THE PUMP ON THE SIDE WALL

REV	DATE	BY	CH
02MAR20	LST	AZA	
07FEB20	LST	AZA	
23JAN20	LST	AZA	
18OCT19	LST	AZA	

CHASSIS DATA
MAKE: PIERCE
MODEL: VELOCITY

Pierce MANUFACTURING INC.

TITLE: 2000-D-750 GAL POLY, 171" BODY, FH FDLER (3) SPEEDLAYS, LDRS. BTWN. TANK & S. SHEET, DELUGE
FOR: CITY OF GARFIELD GARFIELD, NEW JERSEY
DWG NO.: 34372AD

JOB NO.	34372
SCALE	1:24
DATE	
DRAWN BY	LST 080CT19
CHECKED BY	AZA 140CT19
SHEET SIZE	D
SHEET NO.	1 OF 1

View File Created 04-MAR-2020 13:53:36