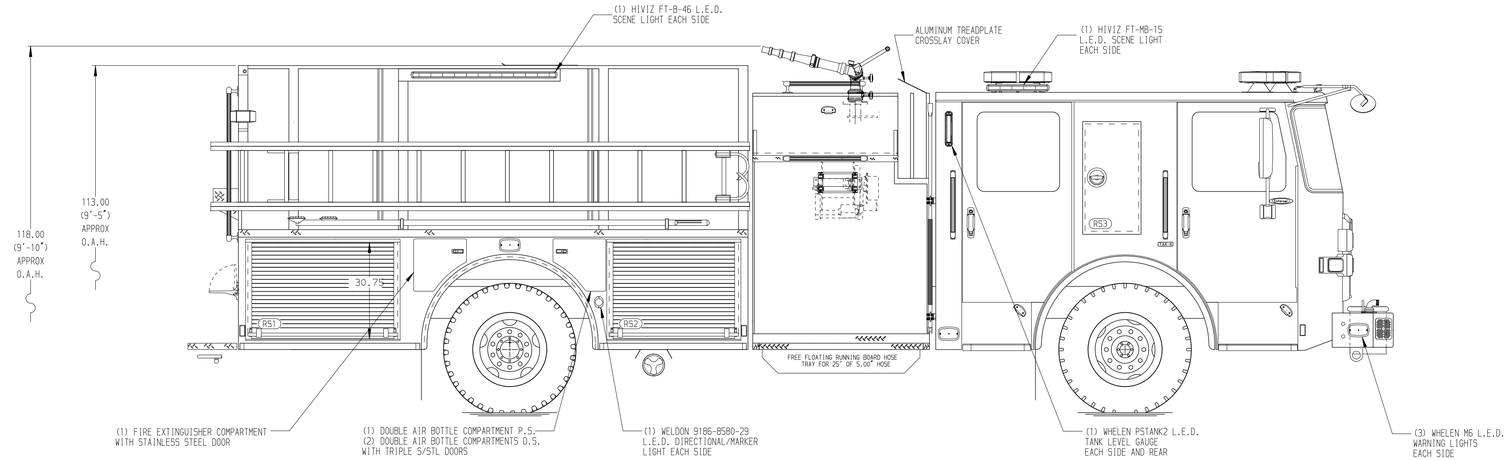

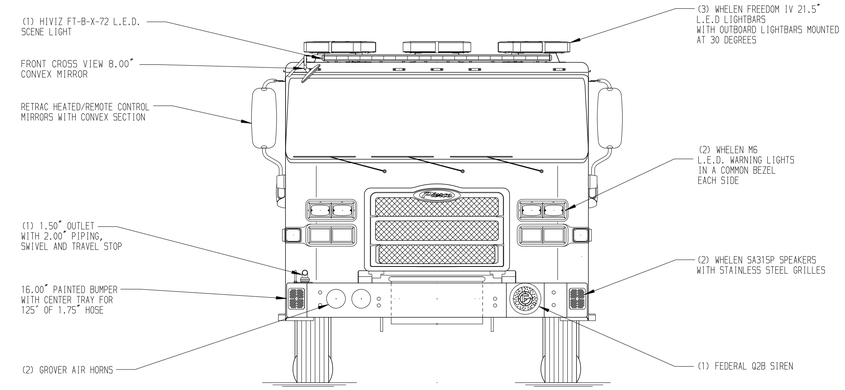

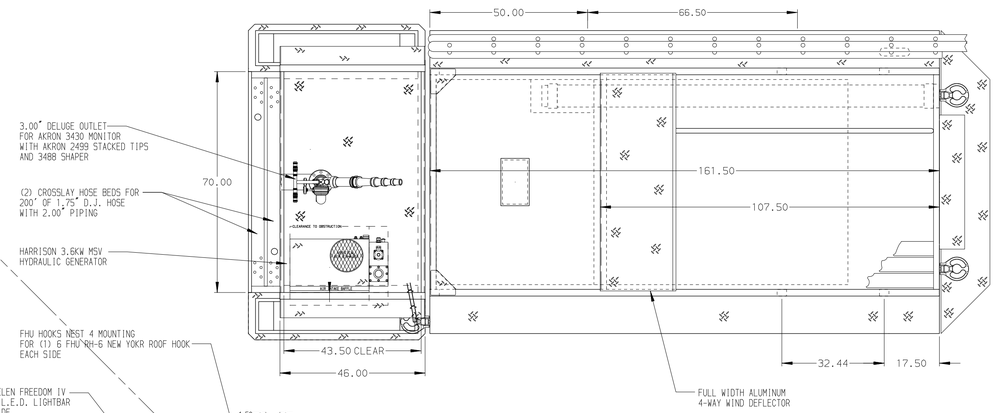

HOSEBED CAPACITIES

1. 300' OF 2.50" D.J. POLY HOSE
2. 300' OF 2.50" D.J. POLY HOSE
3. 1000' OF 4.00" D.J. POLY HOSE
4. 300' OF 3.00" D.J. POLY HOSE
5. 300' OF 3.00" D.J. POLY HOSE

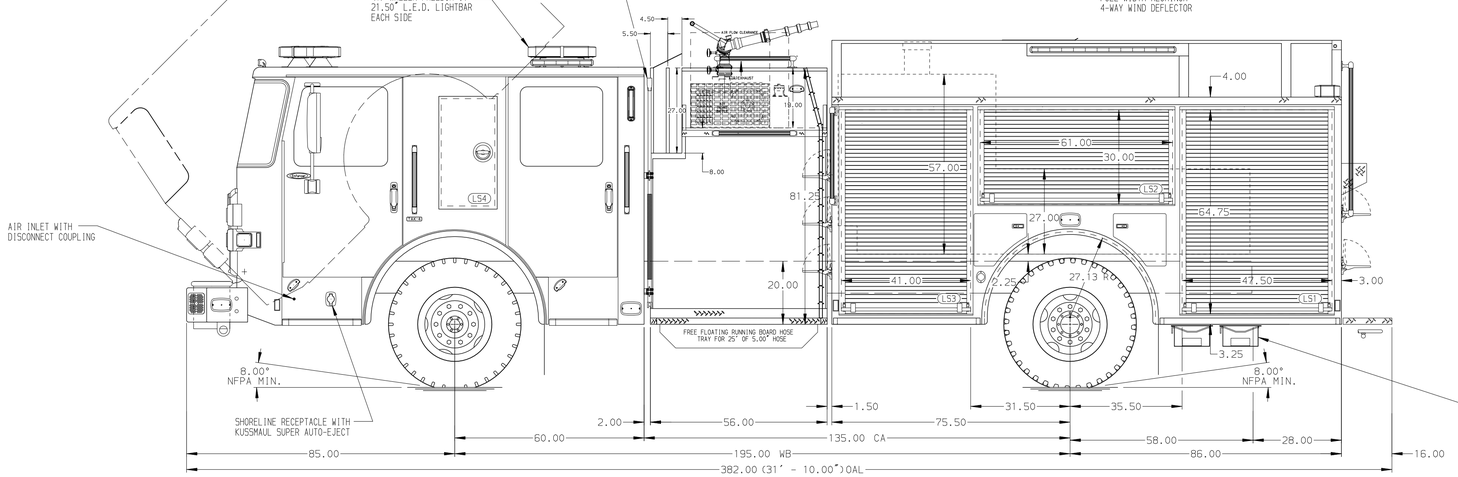

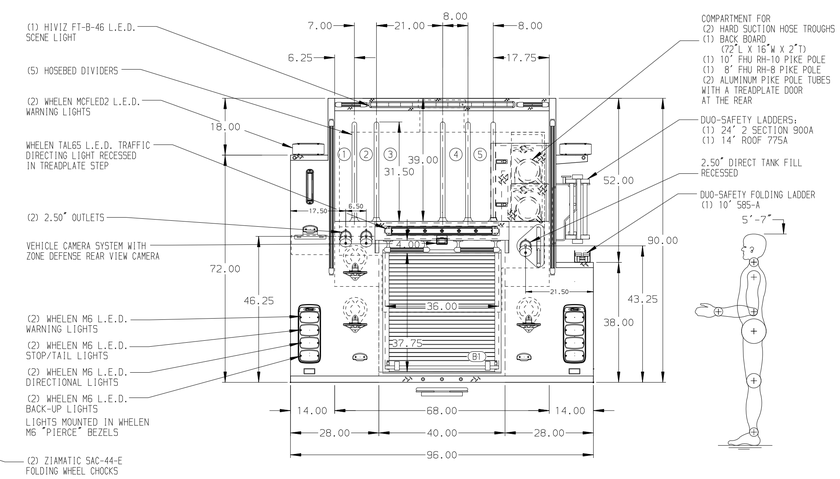

ALUMINUM BODY

MAXIMUM O.A.H. 118.00"

SIDE ROLL AND FRONTAL IMPACT PROTECTION

NOTE

DIMENSIONS SHOWN ARE APPROXIMATE AND ARE SUBJECT TO MINOR DEVIATIONS AS MAY OCCUR OR BE NECESSARY IN CONSTRUCTION.
MINOR DETAILS NOT SHOWN.

1. BATTERY CHARGER/COMPRESSOR LOCATED BEHIND DRIVER'S SEAT
2. BATTERY CHARGE INDICATOR LOCATED ON DRIVER'S SEAT RISER
3. DUAL L.E.D. LIGHT STRIPS LOCATED IN HOSE BED
4. ELASTIC PULL STRAP FOR DOOR ON COMPARTMENT LS1,LS2,LS3
5. DRIP PAN GUARD FOR ROLL-UP DOOR LOCATED LS1,LS2,LS3,RS1,RS2,B1
6. ONE FULL WIDTH/DEPTH ADJUSTABLE SHELF IN COMPARTMENT LS1,LS2,RS2,THREE IN LS3
7. ONE "L" SHAPED PARTITION LOCATED IN COMPARTMENT LS3
8. CIRCUIT BREAKER PANEL IN COMPARTMENT LS3
9. AUTOMATIC TIRE CHAINS
10. ONE HANNAY CORD REEL MODEL 1618-17-18 WITH 200' OF 10/3 CABLE LOCATED IN RIGHT SIDE PUMP HOUSE

REV	DATE	BY	CH
7	07FEB20	JWO	JGO
6	06JAN20	JWO	JGO
5	140CT19	JWO	NPE
4	100CT19	JWO	NPE

CHASSIS DATA
MAKE: PIERCE
MODEL: ENFORCER

Pierce MANUFACTURING INC.

TITLE: 1500-D-1000P,161",FULL HEIGHT D.S.,LOW P.S.,FDLER (2) X-LAYS,DELUGE,GENERATOR,CORD REEL
FOR: UPPER HOMINY FIRE & RECUSE CANDLER, NORTH CAROLINA
DWG NO.: 34359AD

JOB NO. 34359
SCALE 1:24
DATE
DRAWN BY JWO 010CT19
CHECKED BY NPE 100CT19
SHEET SIZE D
SHEET NO. 1 OF 1

View File Created 11-FEB-2020 06:10:23