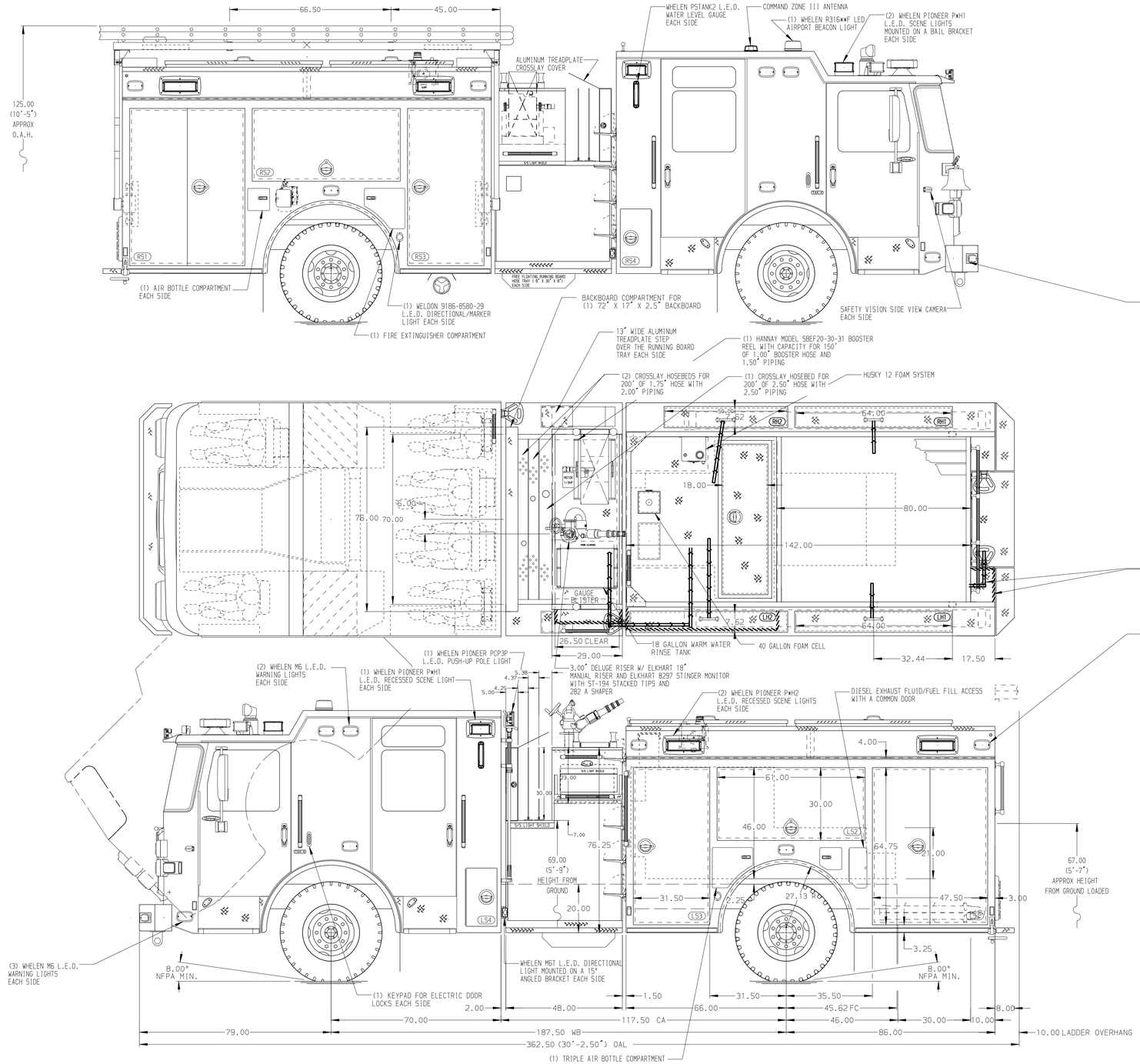

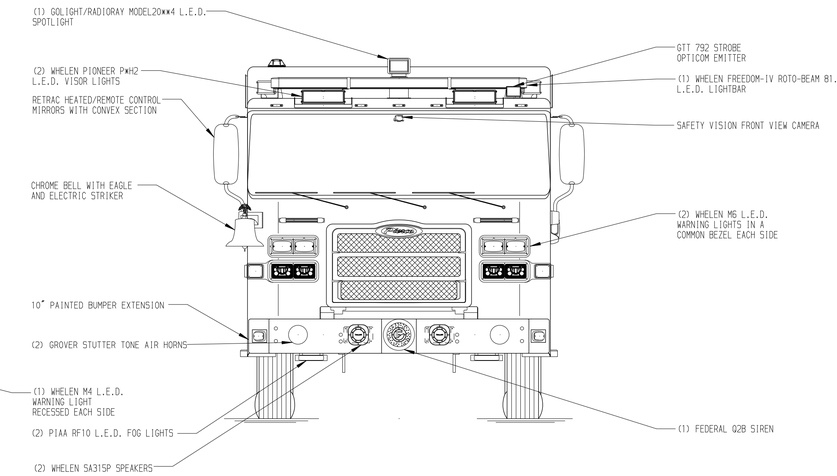

NUTCERTS

COMPRESSION FITTINGS

HOSEBED CAPACITIES

1. 200' OF 2.50" D.J. POLY HOSE
   300' OF 1.75" D.J. POLY HOSE ON TOP
2. 800' OF 2.50" D.J. POLY HOSE
3. 1000' OF 5.00" D.J. POLY HOSE

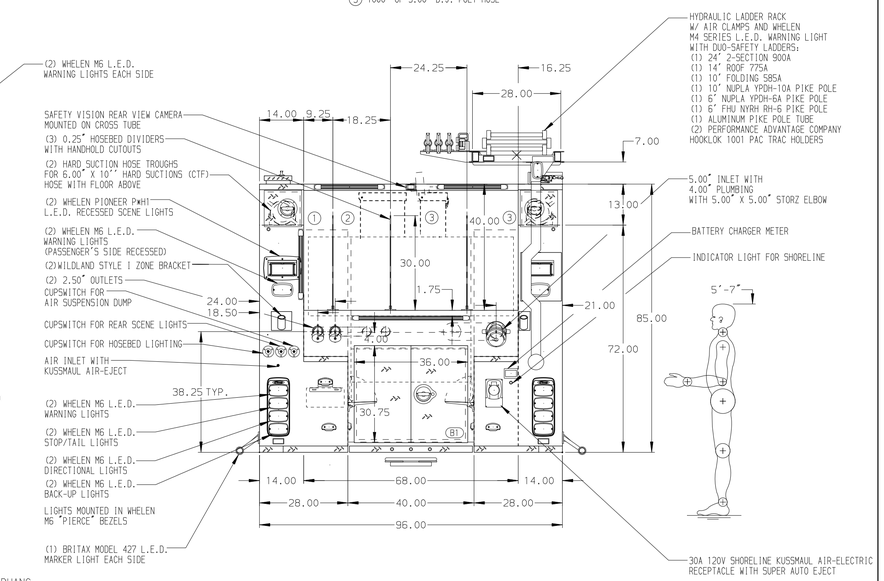

ALUMINUM BODY

SIDE ROLL AND FRONTAL IMPACT PROTECTION

NOTE

DIMENSIONS SHOWN ARE APPROXIMATE AND ARE SUBJECT TO MINOR DEVIATIONS AS MAY OCCUR OR BE NECESSARY IN CONSTRUCTION.
MINOR DETAILS NOT SHOWN.

1. ONSPOT AUTOMATIC TIRE CHAINS TO BE PROVIDED AT THE REAR
2. WHEEL CHOCKS AND BRACKETS (CTF)
3. DOMETIC REFRIGERATOR IN THE LEFT SIDE EMS CABINET
4. 120V NEMA DUPLEX RECEPTACLE BEHIND THE OFFICER'S SEAT

REV	DATE	BY	CH
V	06FEB20	LST	AZA
V	28JAN20	LST	AZA
V	13DEC19	LST	AZA

CHASSIS DATA
MAKE: PIERCE
MODEL: ENFORCER

Pierce MANUFACTURING INC.

TITLE: 1500-D-540P, 500 GAL WATER W/40 GAL FOAM, 152" BODY (3)XLAYS, HYDRAULIC LADDER RACK,DELUGE, BOOSTER REEL
FOR: PORTLAND AIRPORT PDX, PORTLAND, OREGON
DWG NO.: 34250AD-SH1

JOB NO.	34250
SCALE	1:24
DATE	
DRAWN BY	LST 09SEP19
CHECKED BY	AZA 12SEP19
SHEET SIZE	D
SHEET NO.	1 OF 2

View File Created 07-FEB-2020 06:32:32