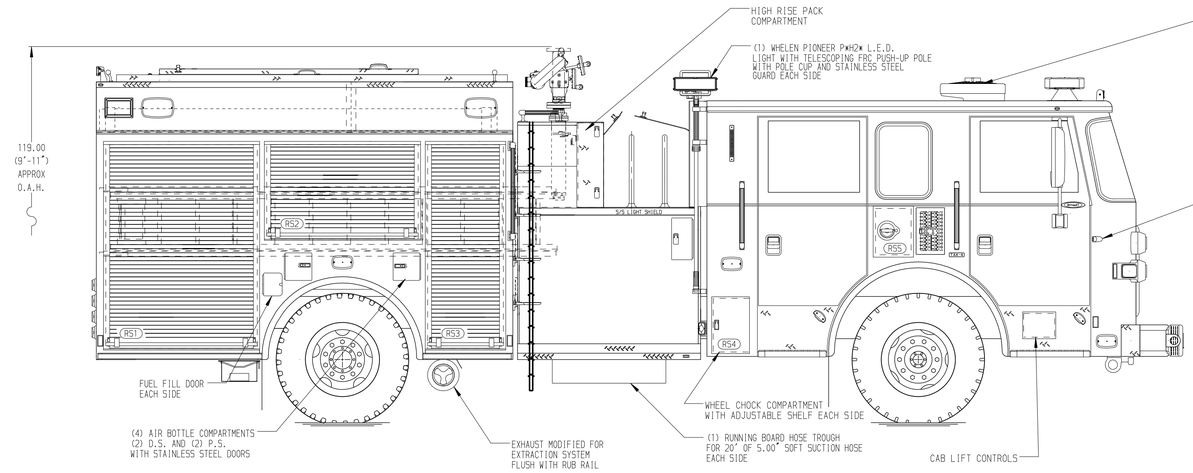

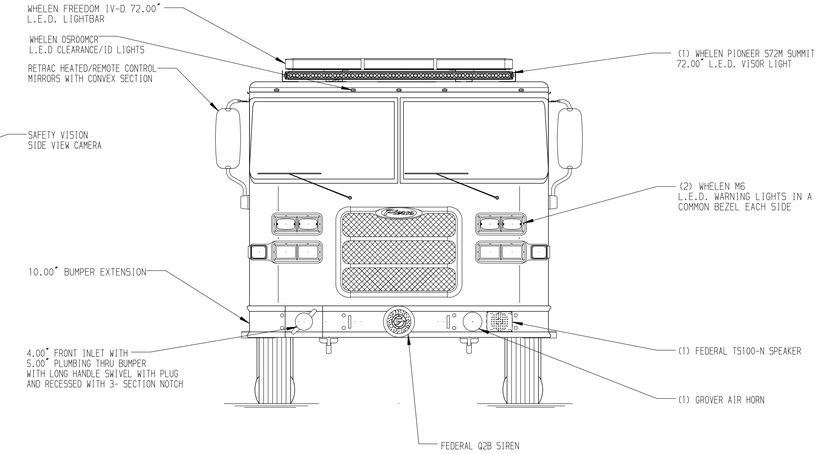

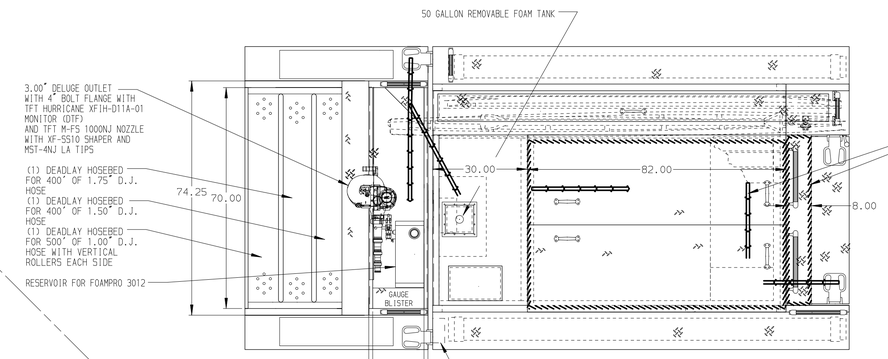

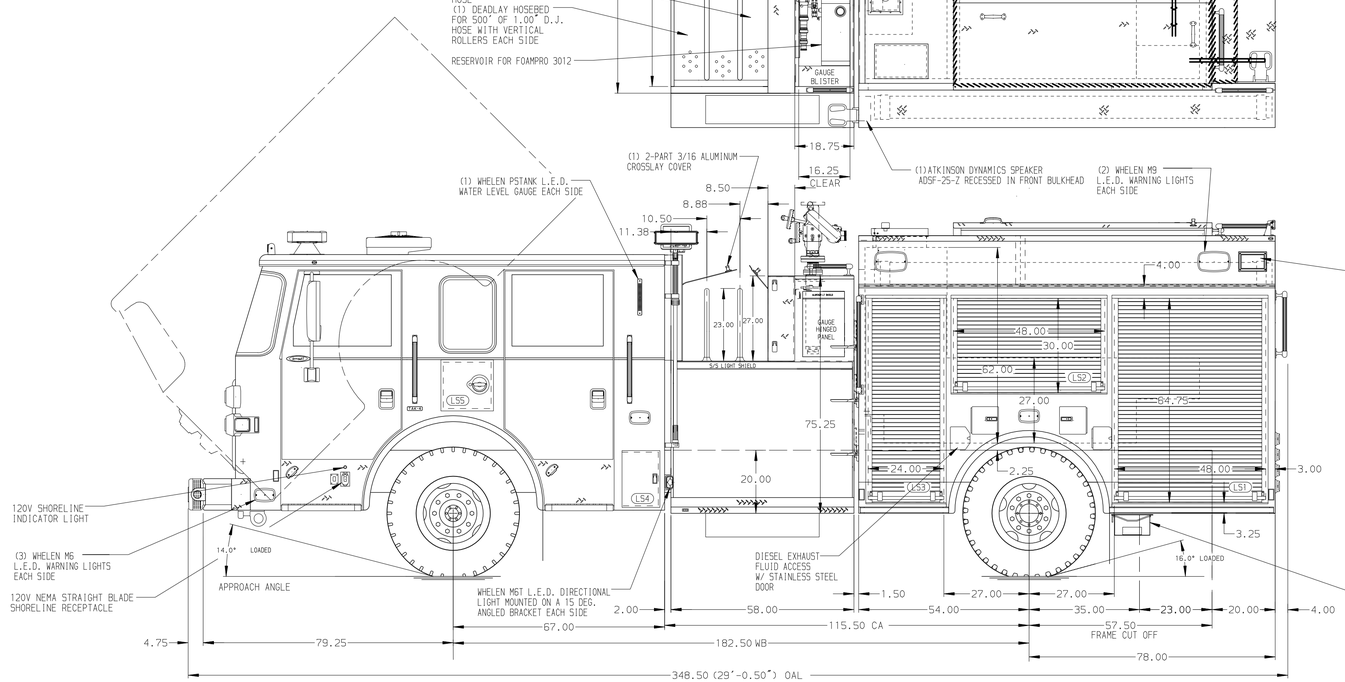

HOSEBED CAPACITIES

1. 750' OF 4.00" D.J. POLY HOSE
2. 750' OF 2.50" D.J. POLY HOSE

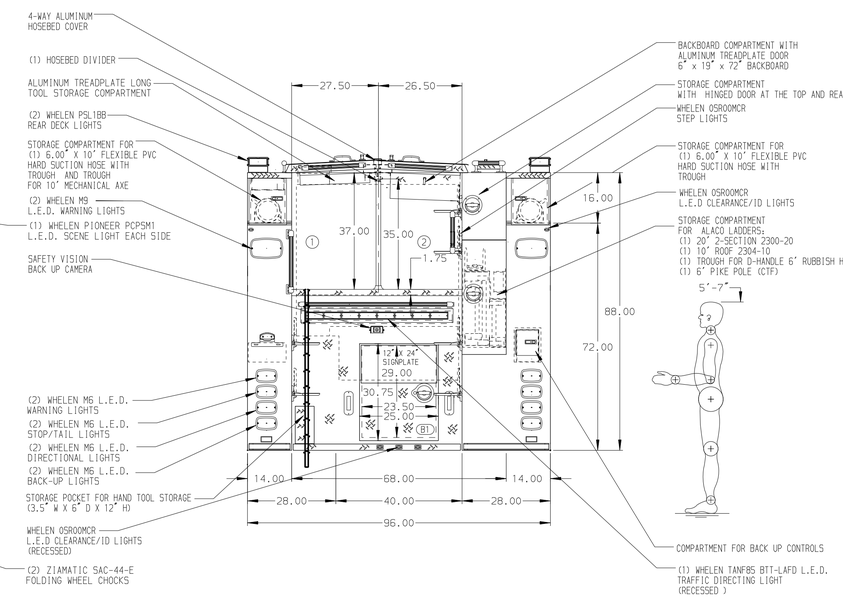

ALUMINUM BODY

MAXIMUM O.A.H. 120.00"

NOTE

DIMENSIONS SHOWN ARE APPROXIMATE AND ARE SUBJECT TO MINOR DEVIATIONS AS MAY OCCUR OR BE NECESSARY IN CONSTRUCTION.
MINOR DETAILS NOT SHOWN.

1. AIR INLET/OUTLET W/ MCMASTER DISCONNECT FITTING ON D.S. PUMP PANEL
2. BATTERY CHARGER LOCATED IN CREW CAB SEAT RISER
3. BATTERY CHARGER INDICATOR LOCATED NEAR D.S. SEAT RISER WITH BRACKET
4. DELRAN- 4-WAY HYDRANT VALVE MOUNTING PEG LOCATED ON THE D.S. OF THE TAILBOARD
5. DRIP PAN GUARD FOR ROLL-UP DOOR LOCATED ON ALL SIDE BODY COMPARTMENTS
6. KEYED LOCK FOR LATCH FOR B1
7. FULL WIDTH/DEPTH SHELVES TWO IN LS1, RS1, AND RS3 AND ONE IN LS2, LS3, B1, AND RS2
8. ONE FIXED FULL WIDTH/DEPTH SHELF IN LS3 AND RS1
9. ONE CTECH DRAWER ASSEMBLY IN LS3
10. ONE VERTICAL PARTITION IN LS1
11. RESPOND READY STORAGE W/ 4 DRAWERS IN RS1
12. MOUNTING RACK FOR ONE AIR BOTTLE, ONE DRY CHEM BOTTLE IN LS1
13. FOAM PRO 3012 FOAM SYSTEM
14. TRUCK-LITE 35200 RECESSED L.E.D MARKER LIGHTS IN THE FRONT OF EACH RUNNINGBOARD
15. TWO SCBA BRACKETS MOUNTED IN LS1 AND RS1
16. PLASTIC UPF GRATING FOR ALL SHELVES
17. TWO HALF WIDTH PARTITIONS IN RS1
18. SAMLEX INVERTER IN A BRACKET ON THE DRIVER'S SIDE SEAT RISER

REV	DATE	BY	CH
7	07JAN20	AMI	MSA
6	11DEC19	LST	MSA
5	03OCT19	LST	SHA

CHASSIS DATA — MAKE: PIERCE — MODEL: ARROW XT

Pierce MANUFACTURING INC.

TITLE: 1750-D-500P W/ 50 GAL REMOVABLE FOAM TANK, 132"BODY (3)DEADLAYS, LADDERS BETWEEN TANK AND S. SHEET

FOR: LOS ANGELES CITY FIRE DEPARTMENT, LOS ANGELES, CALIFORNIA

DWG NO.: 34226AD

JOB NO.	34226
SCALE	1:24
DATE	26SEP19
DRAWN BY	LST
CHECKED BY	SHA
SHEET SIZE	D
SHEET NO.	1 OF 1

View File Created 07-JAN-2020 13:35:22