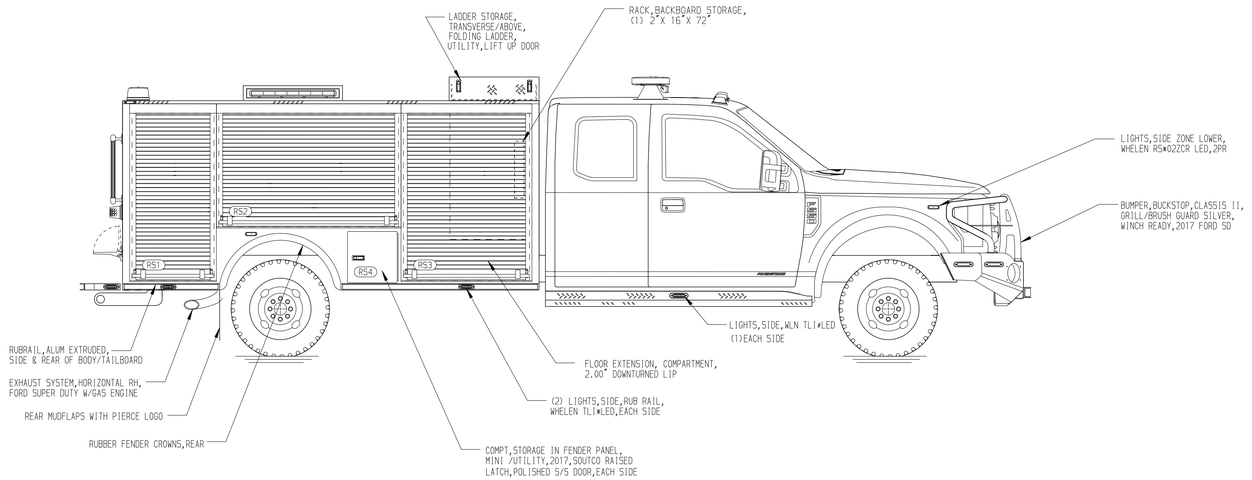

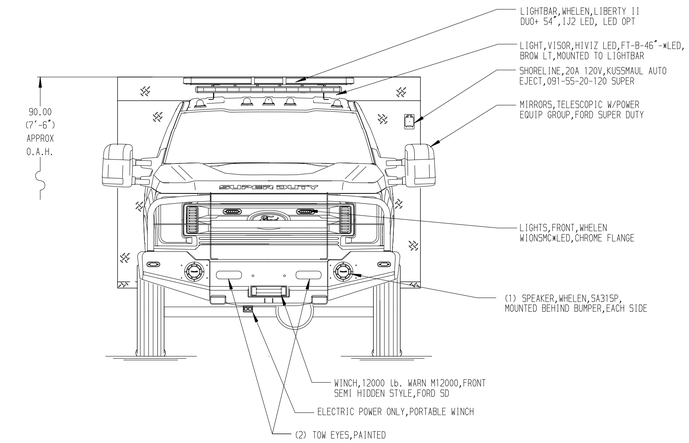

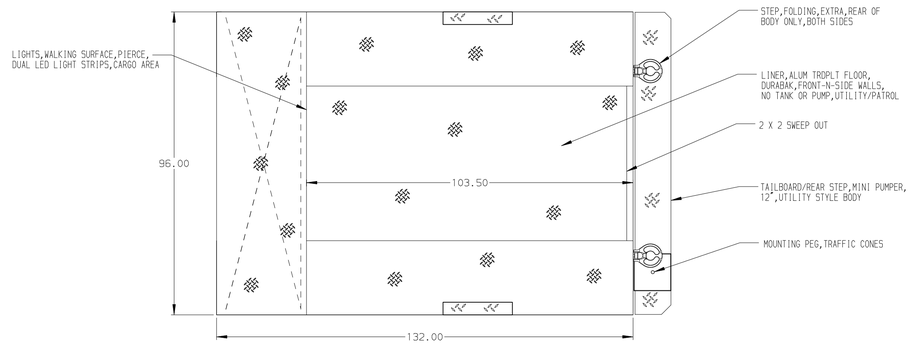

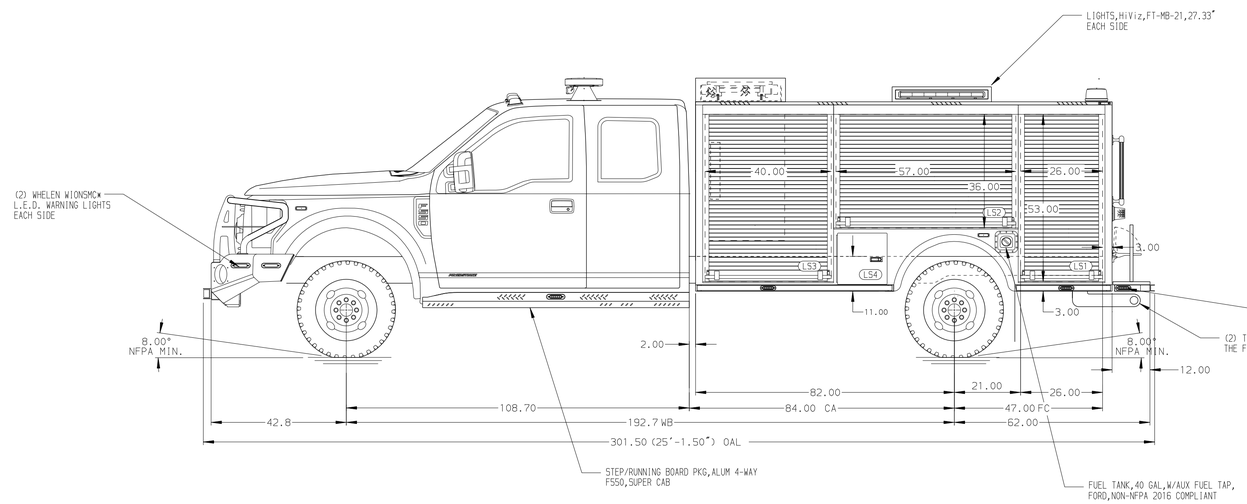

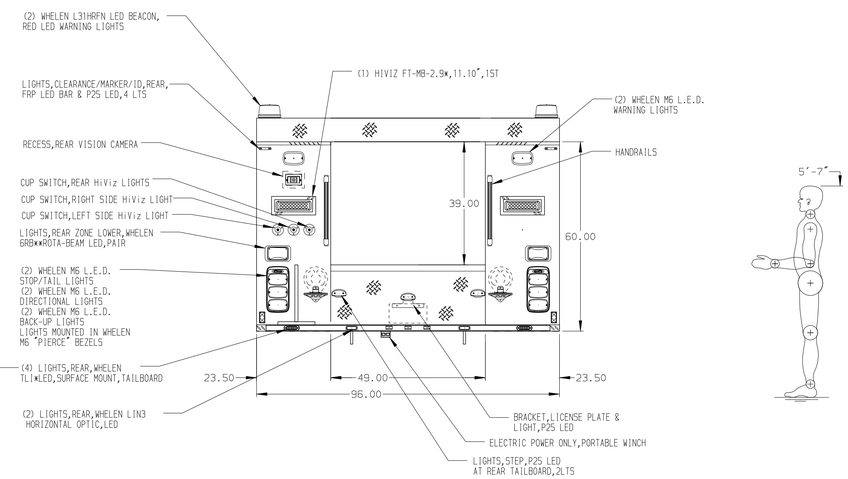

ALUMINUM BODY

NOTE
DIMENSIONS SHOWN ARE APPROXIMATE AND ARE SUBJECT TO MINOR DEVIATIONS AS MAY OCCUR OR BE NECESSARY IN CONSTRUCTION.
MINOR DETAILS NOT SHOWN.

REV.	DATE	BY	CHK'D
7	10JAN20	RHU	AJA
6	09DEC19	RHU	AJA
5	07OCT19	RHU	RWI

CHASSIS DATA
CHASSIS FORD
MODEL F-550 4X4

Pierce MANUFACTURING INC.
BRADENTON, FLORIDA

TITLE	UTILITY TRUCK –	DATE 24SEP19	JOB NO. 34176 / SCALE 1:24
FOR	FRISCO FIRE DEPARTMENT FRISCO,TEXAS	27SEP19	DRAWN BY JAF / CHK'D BY RWI
DRWG. NO.	34176AD	SHEET NO. 1 OF 1	SHEET SIZE D

View File Created 10-JAN-2020 09:25:50