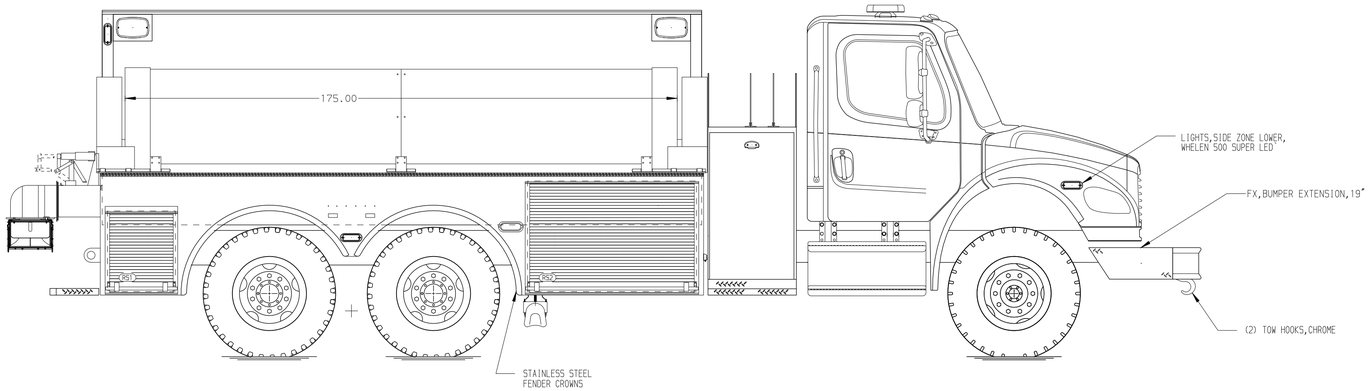

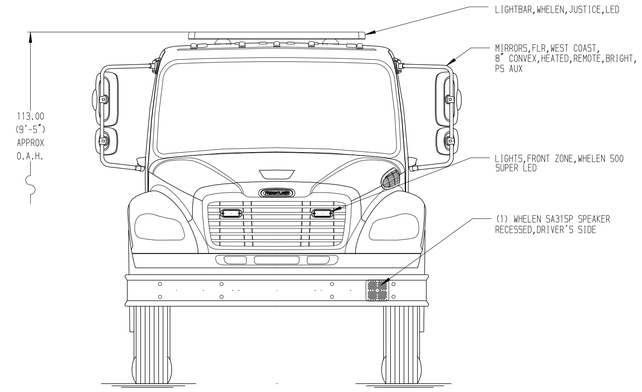

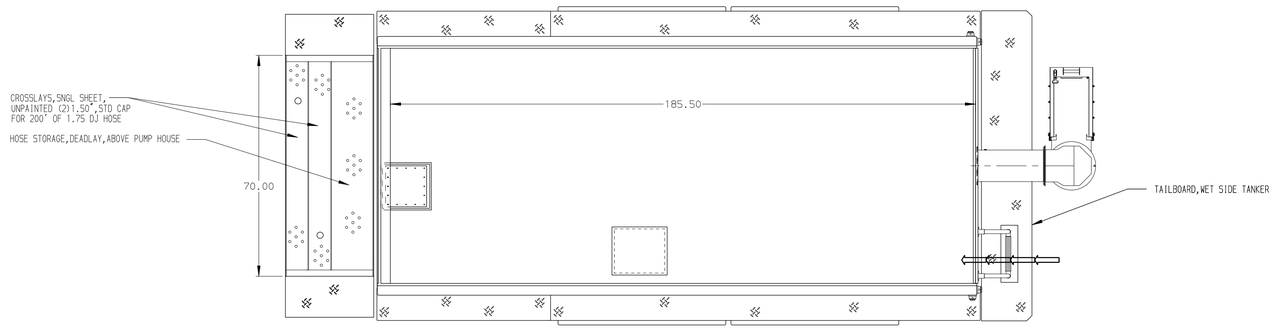

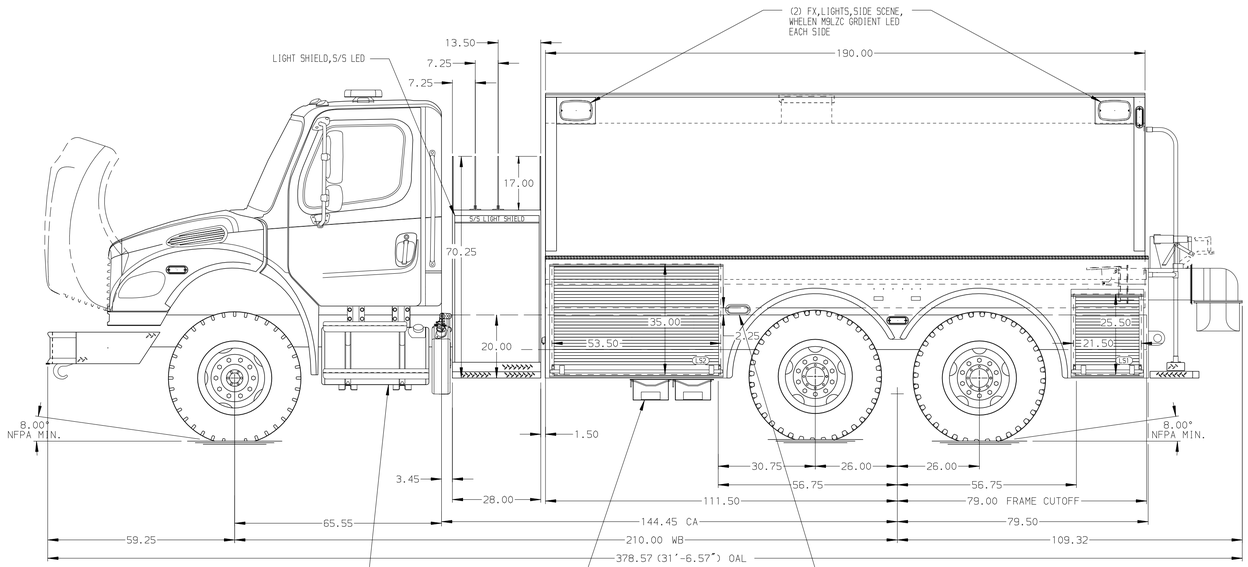

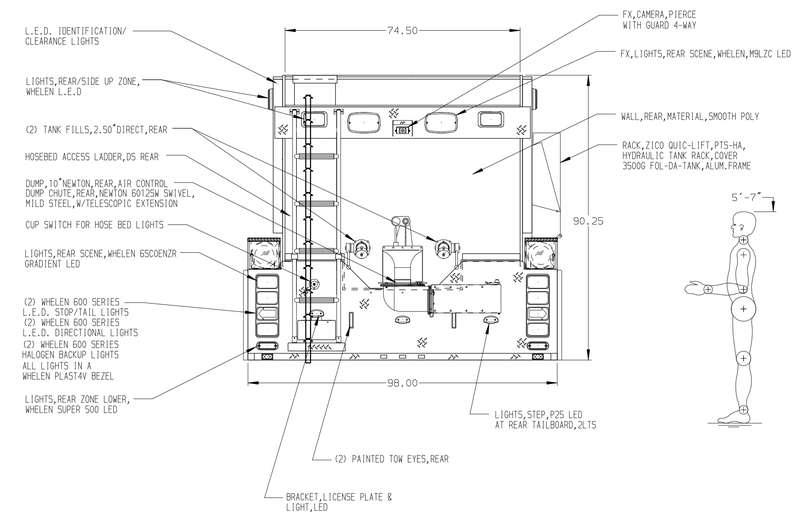

ALUMINUM BODY

NOTE

DIMENSIONS SHOWN ARE APPROXIMATE AND ARE SUBJECT TO MINOR DEVIATIONS AS MAY OCCUR OR BE NECESSARY IN CONSTRUCTION.
MINOR DETAILS NOT SHOWN.

REV	DATE	BY	CH
▽	-	-	-

CHASSIS DATA
MAKE: FL
MODEL: M2-106

Pierce MANUFACTURING INC.
BRADENTON, FLORIDA

TITLE: 1000-D-3000 GALLON POLY WETSIDE TANKER
HALE MBP-100,1000 GPM SINGLE STAGE PTO PUMP

FOR: BOISE CITY FIRE DEPARTMENT
BOISE, IDAHO

DWG NO. 34149AD

JOB NO.	34149
SCALE 1:24	DATE
DRAWN BY JLA	03JAN20
CHECKED BY CAG	8JAN20
SHEET SIZE D	SHEET NO. 1 OF 1

View File Created 08-JAN-2020 08:34:43