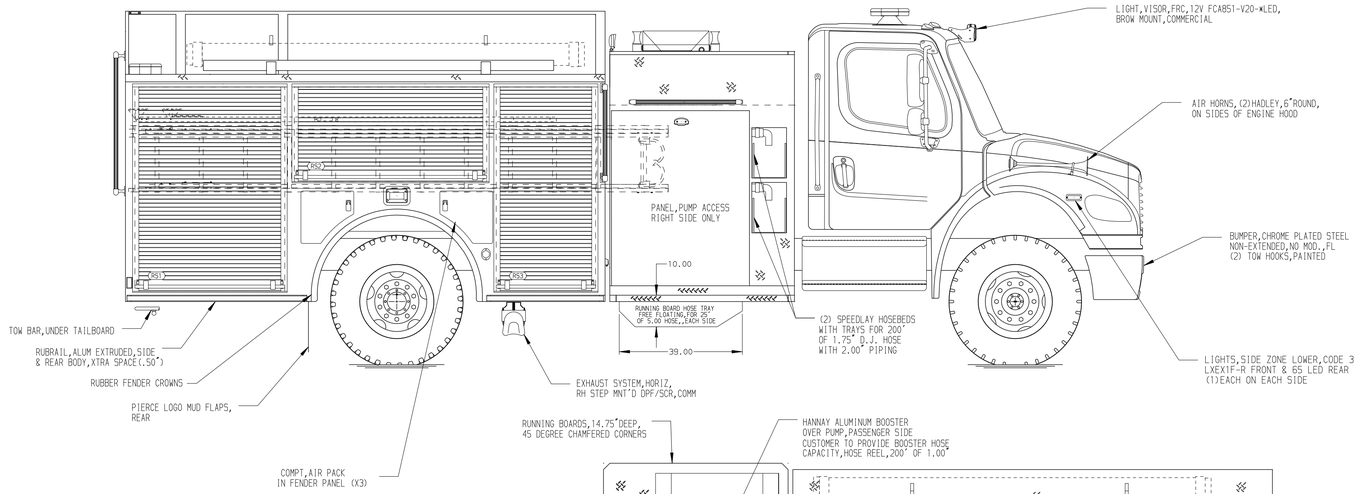

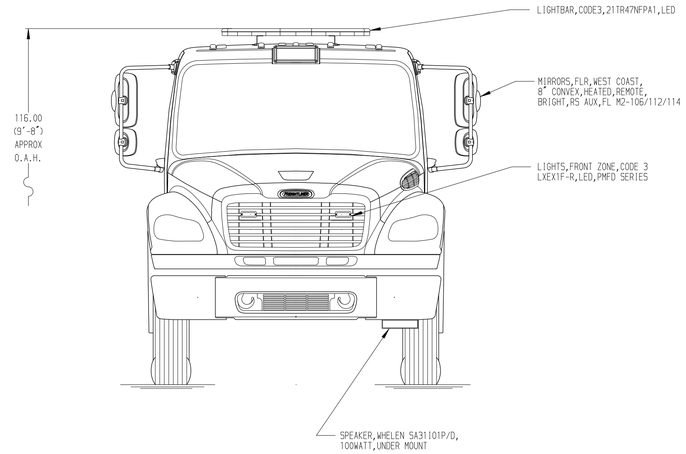

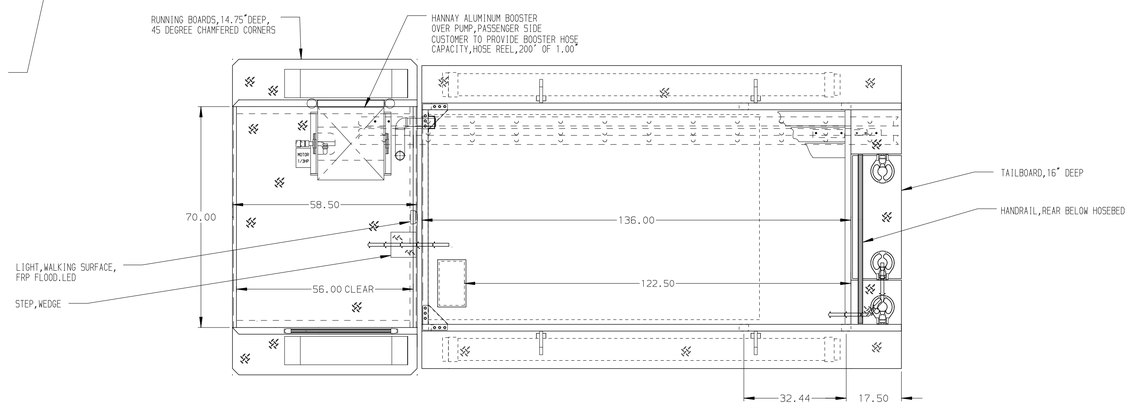

HOSEBED CAPACITIES

1. 1000' OF 5.00"
2. 400' OF 3.00"
3. 200' OF 2.50"

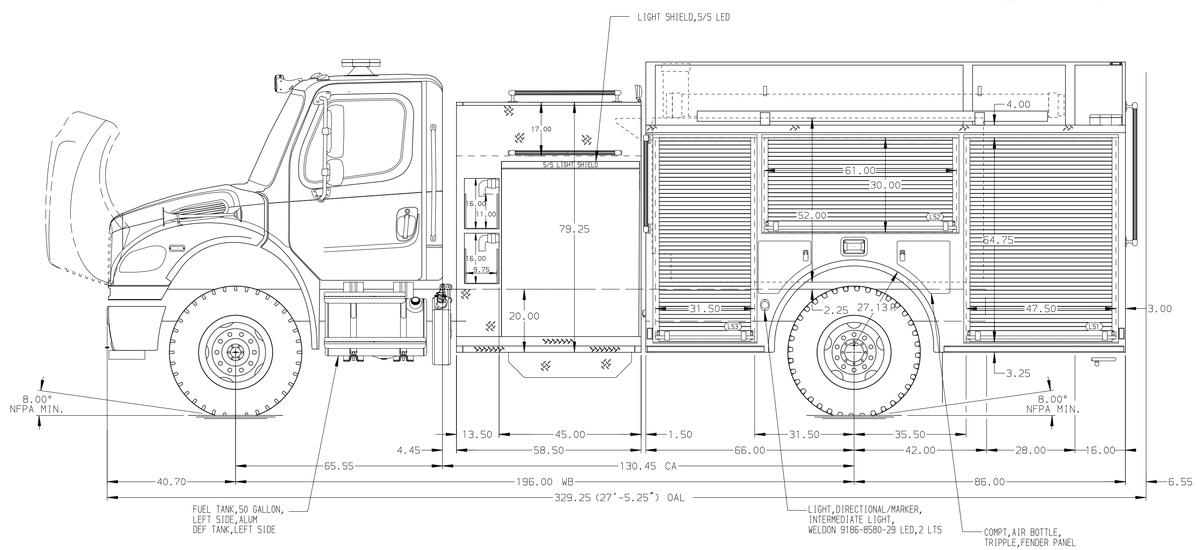

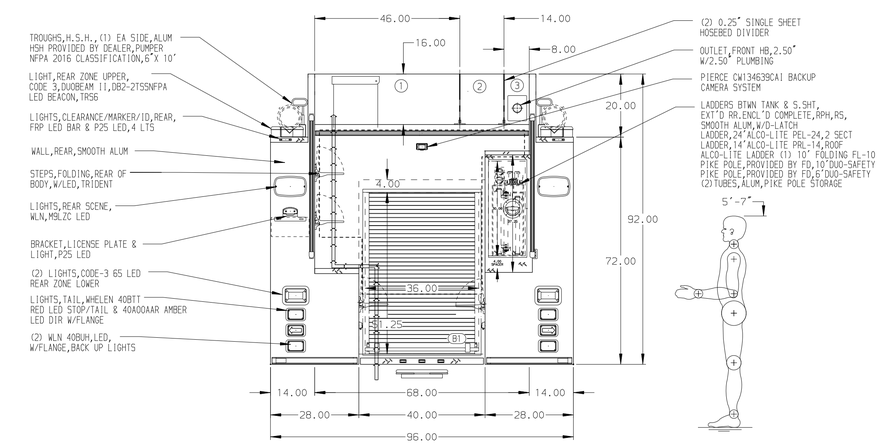

ALUMINUM BODY

NOTE

DIMENSIONS SHOWN ARE APPROXIMATE AND ARE SUBJECT TO MINOR DEVIATIONS AS MAY OCCUR OR BE NECESSARY IN CONSTRUCTION.
MINOR DETAILS NOT SHOWN.

REV	DATE	BY	CH
7	20JAN20	RHU	DDR
6	18DEC19	RHU	DDR
5	04OCT19	JLA	RWI

CHASSIS DATA
MAKE: FL
MODEL: M2-106

Pierce MANUFACTURING INC.

TITLE: 1250-D-1000P,152",LS & RS FULL HGHT FRT & RR,FDLER 45"SIDE CONTROL,(2)1.5"SPEEDLAYS

FOR: BAKER COUNTY FIRE DEPARTMENT
MACCLENNY, FLORIDA

DWG NO.: 34148AD

JOB NO.	34148
SCALE	1:24
DATE	
DRAWN BY	JLA
DATE	04SEP19
CHECKED BY	RWI
DATE	09SEP19
SHEET SIZE	D
SHEET NO.	1 OF 1

View File Created 20-JAN-2020 12:11:21