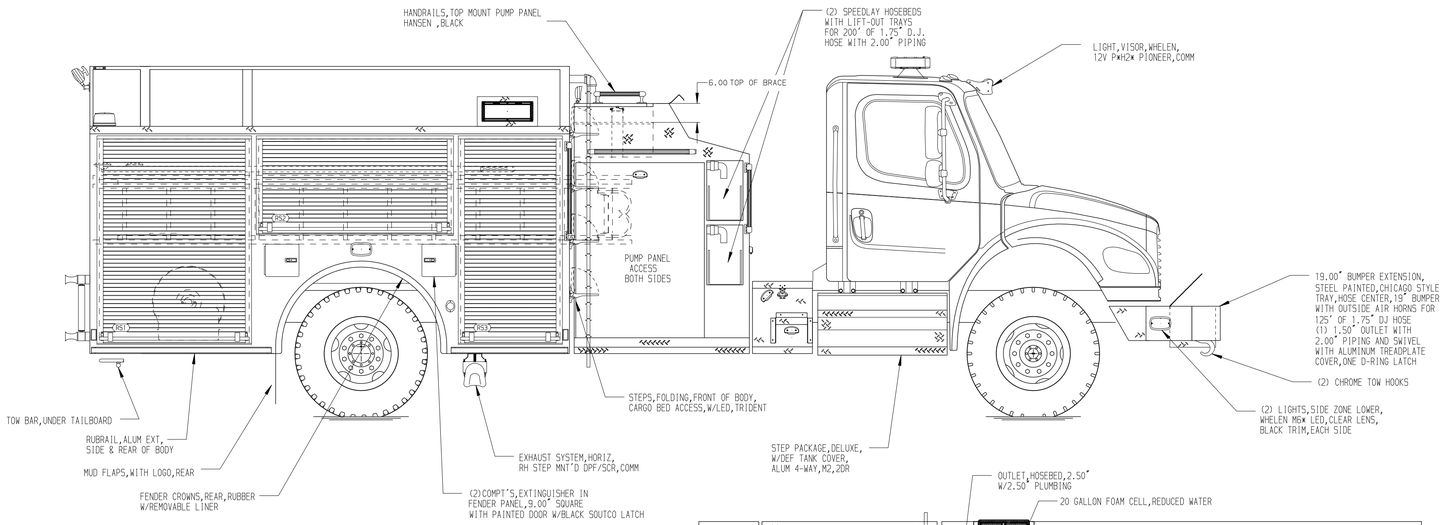

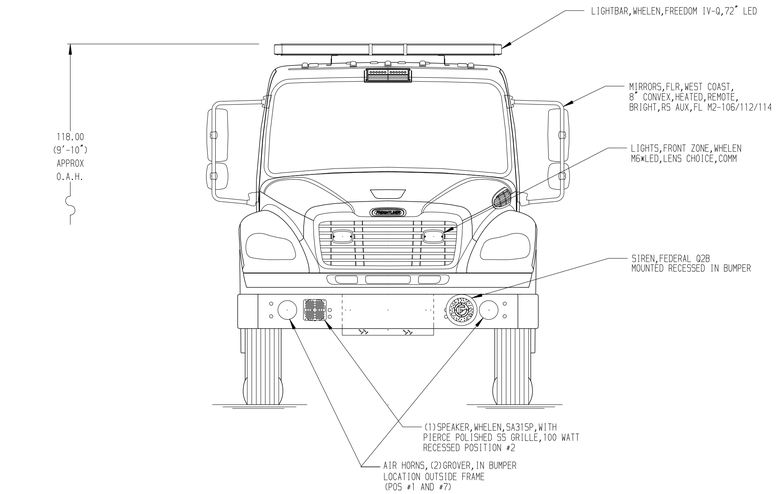

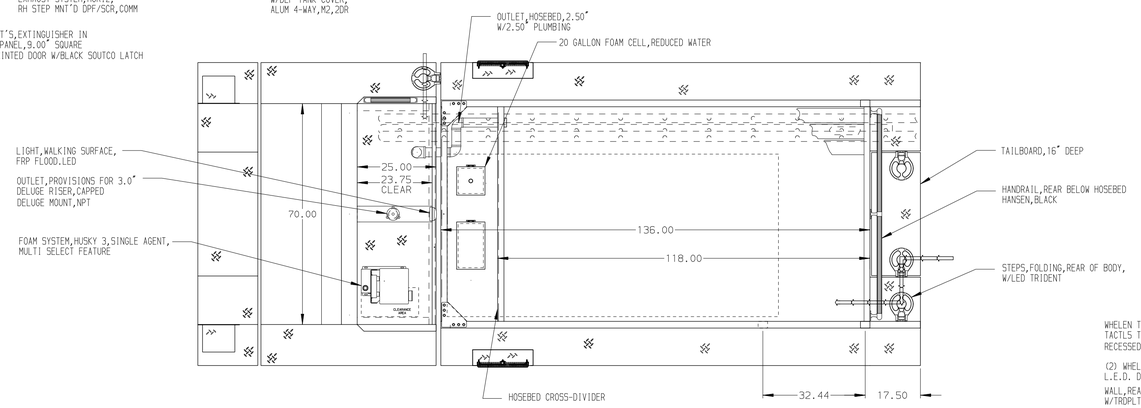

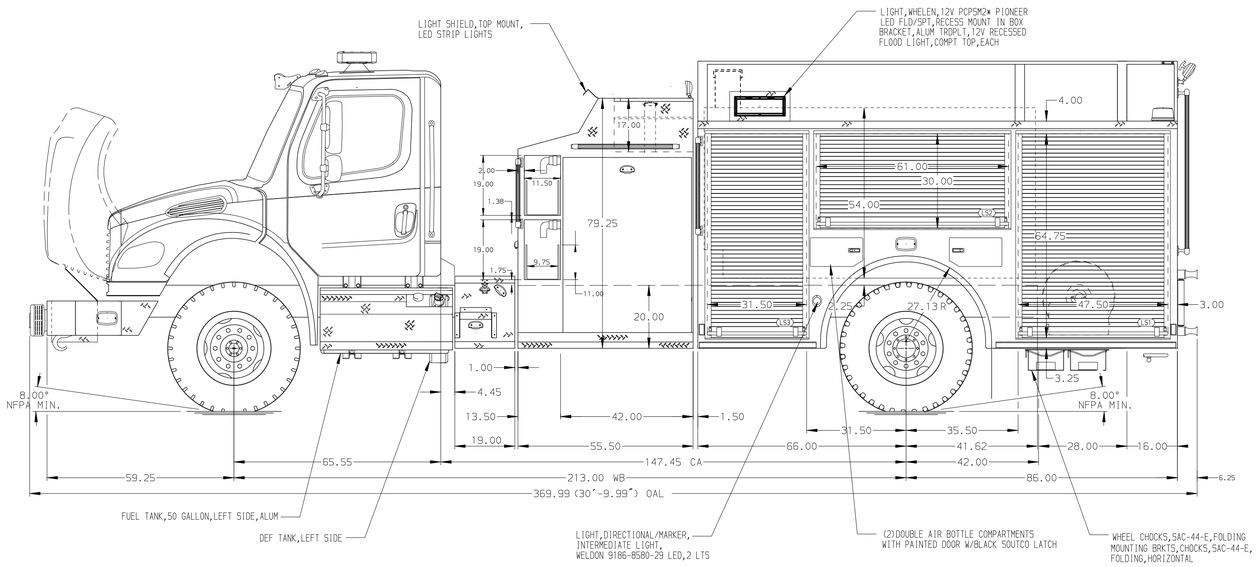

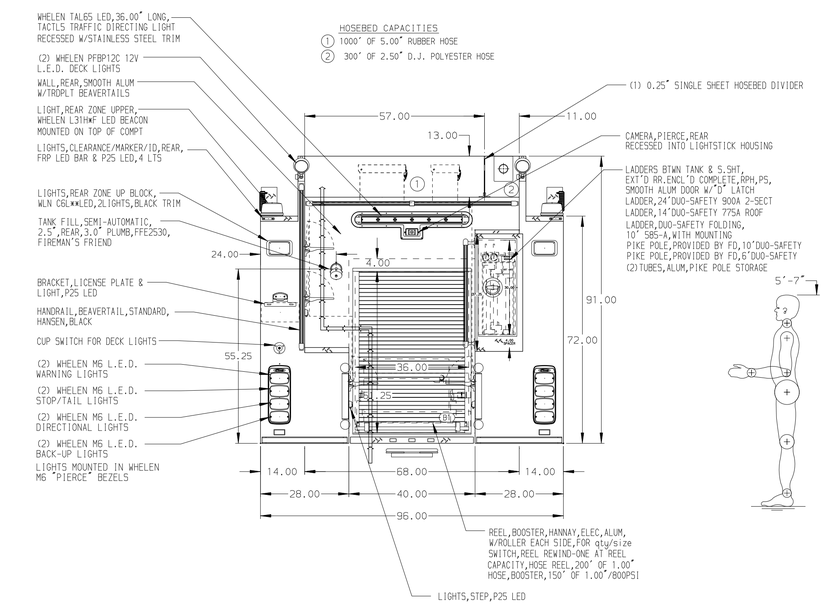

ALUMINUM BODY

NOTE

DIMENSIONS SHOWN ARE APPROXIMATE AND ARE SUBJECT TO MINOR DEVIATIONS AS MAY OCCUR OR BE NECESSARY IN CONSTRUCTION.
MINOR DETAILS NOT SHOWN.

REV	DATE	BY	CH
B	01JAN20	RHU	GSC
A	02DEC19	JLA	GSC

Pierce MANUFACTURING INC.

CHASSIS DATA	TITLE	1250-D-980 POLY,20 FOAM,152"BODY,LS&RS FULL HEIGHT 42"TOP MOUNT W/19"WALKWAY,(2)1.5"SPEEDLAYS	JOB NO. 34056
MAKE FL	FOR	CITY OF OZARK AR OZARK,ARKANSAS	SCALE 1:24 / DATE
MODEL M2-106	DWG NO.	34056AD	DRAWN BY JAF 28AUG19
			CHECKED BY RWI 30AUG19
			SHEET SIZE D / SHEET NO. 1 OF 1