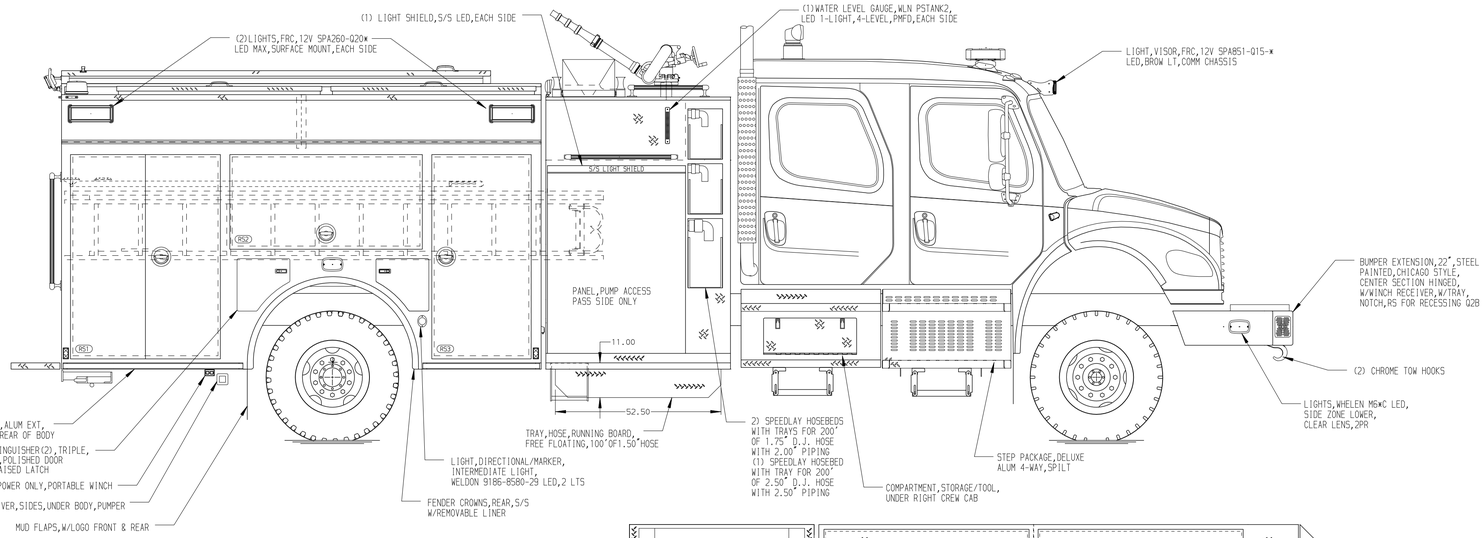

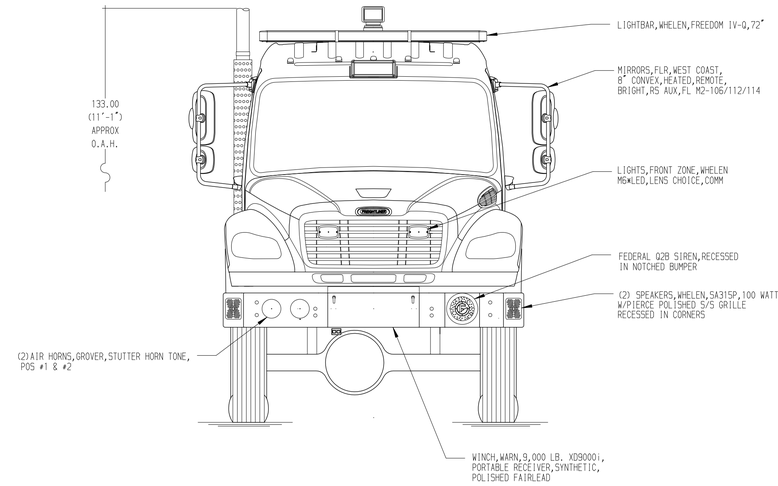

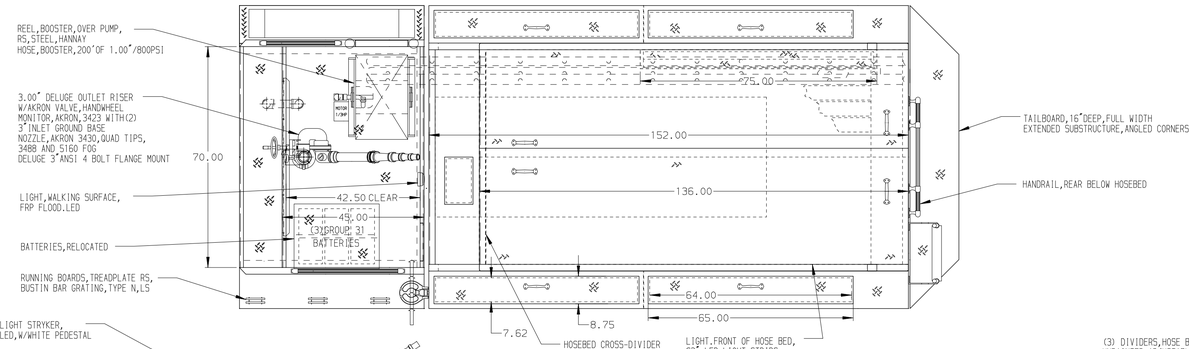

HOSEBED CAPACITIES
1. 1000' OF 5.00" D.J. POLYESTER HOSE
2. 1000' OF 3.00" D.J. POLYESTER HOSE

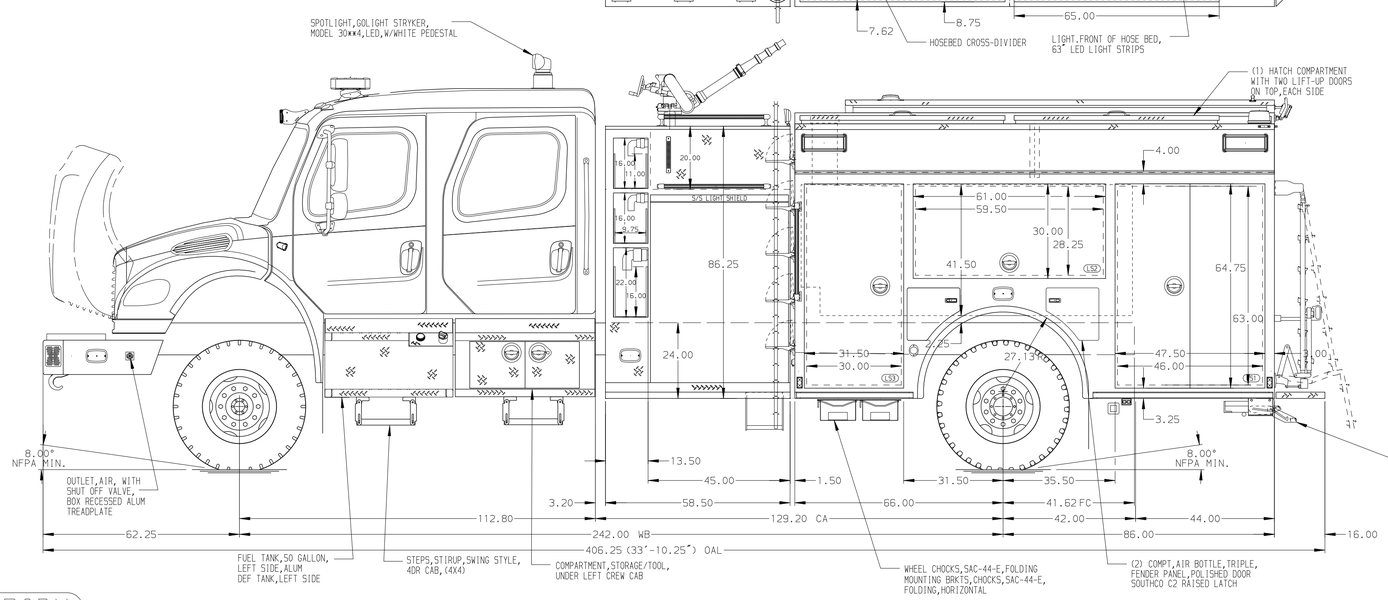

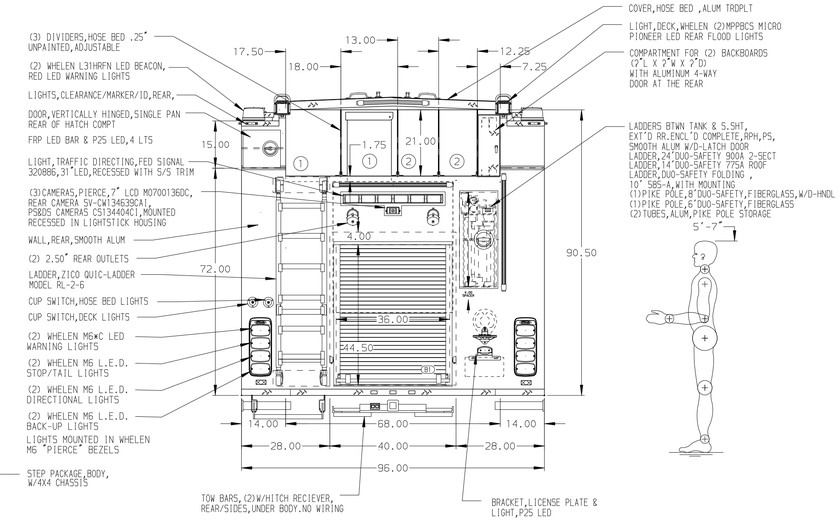

ALUMINUM BODY

NOTE
DIMENSIONS SHOWN ARE APPROXIMATE AND ARE SUBJECT TO MINOR DEVIATIONS AS MAY OCCUR OR BE NECESSARY IN CONSTRUCTION.
MINOR DETAILS NOT SHOWN.

REV	DATE	BY	CH
7	17DEC19	JLA	DDR
6	26NOV19	JLA	AJA
5	21NOV19	JLA	AJA
4	20SEP19	JLA	RWI

CHASSIS DATA — MAKE: FL — MODEL: M2-106 4X4

Pierce MANUFACTURING INC.
BRADENTON, FLORIDA

TITLE: 1500-D-600P,152"BODY,LS FL HGHT&DPTH FRT&RR,RS FDLER 45"SIDE CONTROL,(2)1.5"(1)2.5"SPEEDLAYS

FOR: CITY OF ROSWELL ROSWELL, NEW MEXICO

DWG NO.: 34055AD

JOB NO.	34055
SCALE	1:24
DATE	
DRAWN BY	JLA
DATE	23AUG19
CHECKED BY	RWI
DATE	29AUG19
SHEET SIZE	D
SHEET NO.	1 OF 1

View File Created 17-DEC-2019 13:27:25