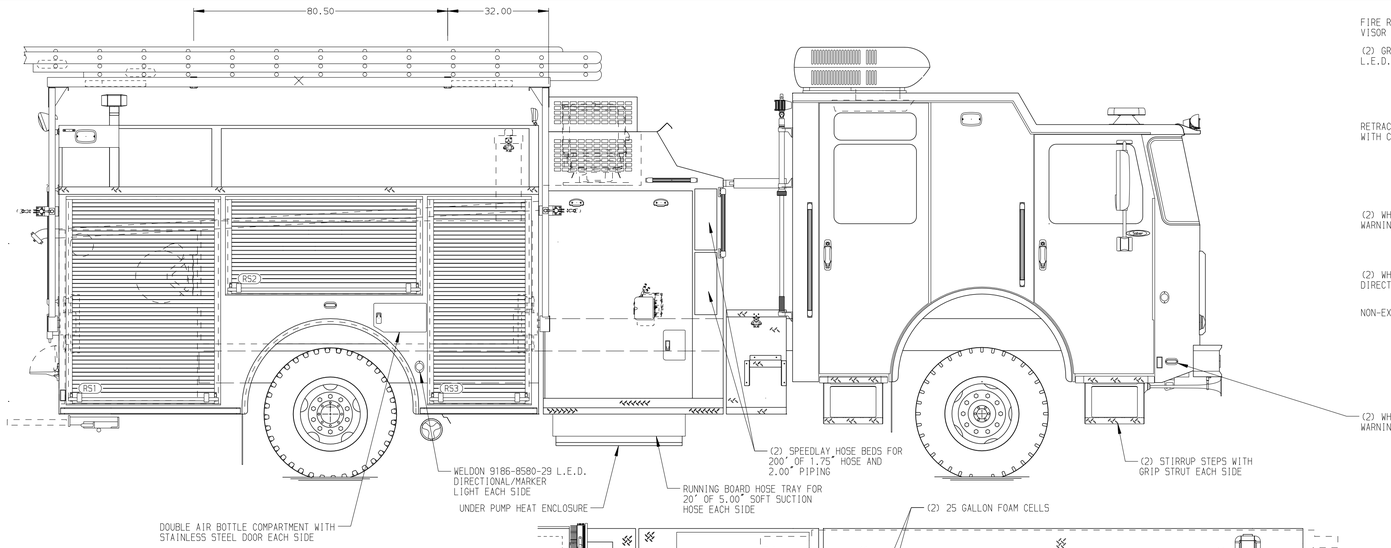

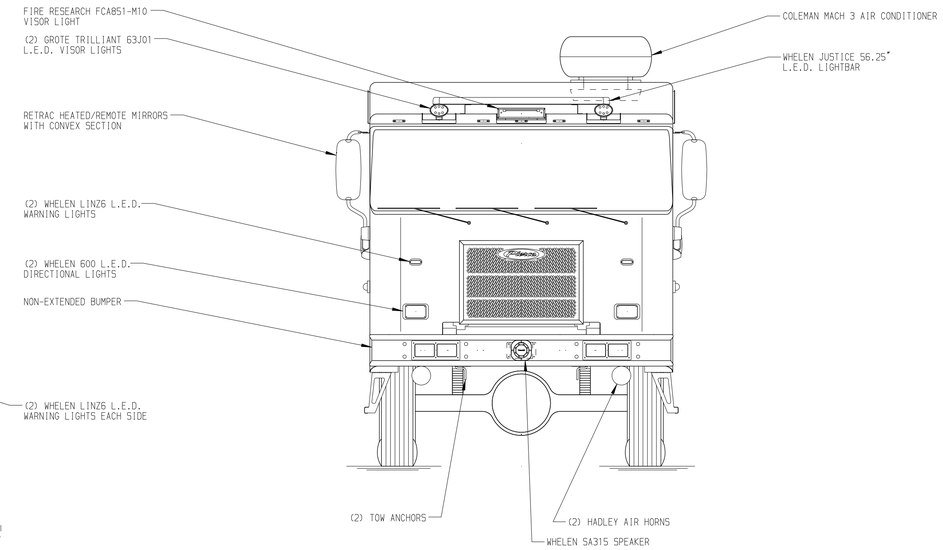

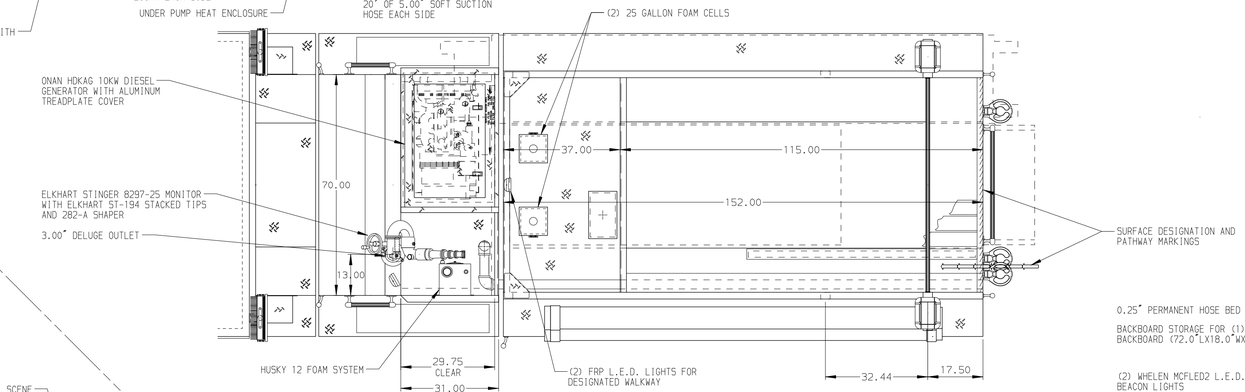

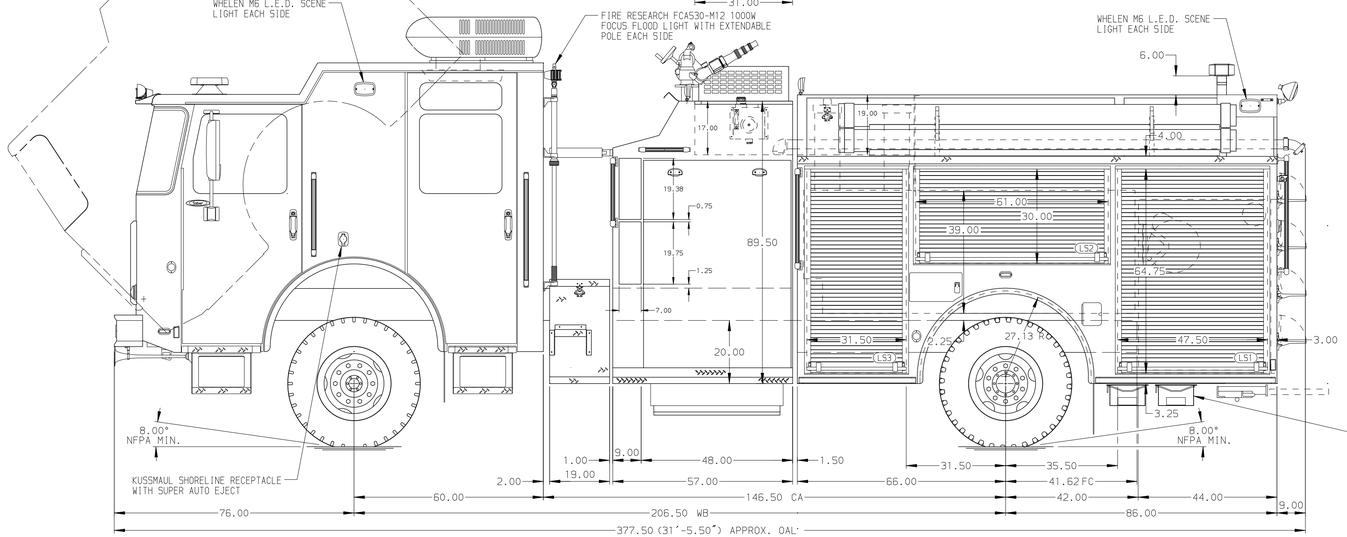

HOSEBED CAPACITIES

1. OPEN BED
2. 1000' OF 5.00" D.J. POLY HOSE
3. 800' OF 3.00" D.J. POLY HOSE

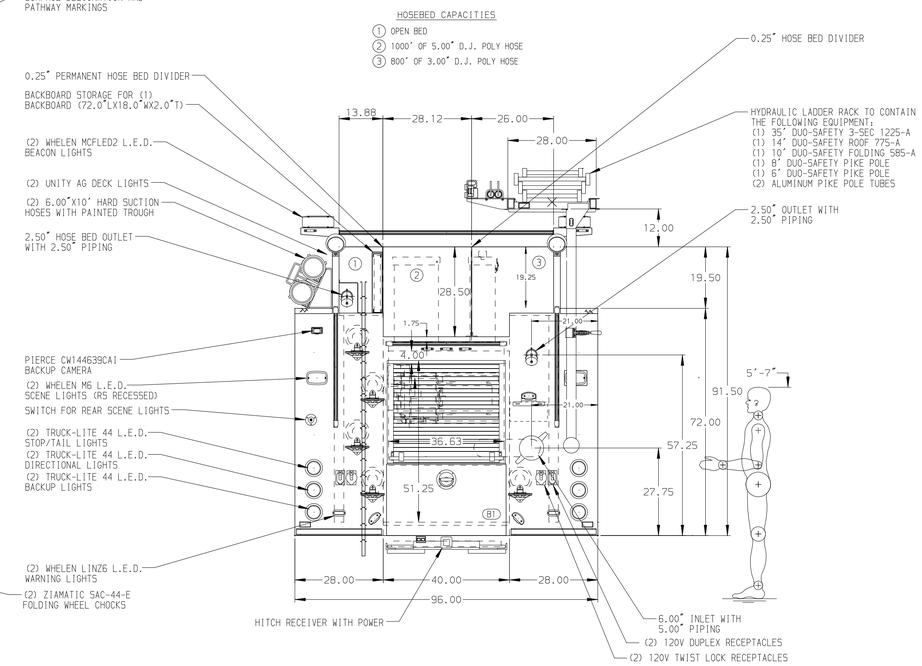

ALUMINUM BODY | MAXIMUM O.A.H. 154.00" | MAXIMUM O.A.L. 380.00"

NOTE

DIMENSIONS SHOWN ARE APPROXIMATE AND ARE SUBJECT TO MINOR DEVIATIONS AS MAY OCCUR OR BE NECESSARY IN CONSTRUCTION.
MINOR DETAILS NOT SHOWN.

1. AIR INLET WITH KUSSMAUL AIR EJECT LOCATED IN DRIVER SIDE STEP WELL
2. AIR OUTLET WITH SHUT OFF VALVE LOCATED AT DRIVER SIDE PUMP PANEL
3. PULL STRAPS FOR DOORS IN COMPARTMENT-LS1,LS2,LS3,RS1,RS2,RS3
4. ONE FULL WIDTH/DEPTH ADJUSTABLE SHELF WITH SIDES IN COMPARTMENT-LS1,LS3,RS1,RS3; TWO IN B1
5. FIVE ADJUSTABLE TILT/SLIDE-OUT TRAYS IN COMPARTMENT-LS2,LS3,RS3;TWO IN LS1
6. CIRCUIT BREAKER PANEL LOCATED IN COMPARTMENT-LS3
7. ONE HANNAY ECR1616-17-18 3-WIRE ELECTRIC REWIND CORD REEL WITH 200' OF 12/3 CABLE IN COMPARTMENT-B1

REV	DATE	BY	CH
1	16DEC19	KLE	PJP
2	17SEP19	BST	NPE

CUSTOMER APPROVAL

APPROVED BY: _____

DATE: _____

Pierce MANUFACTURING INC.

CHASSIS DATA
MAKE: PIERCE
MODEL: SABER FR STEP FRAME

TITLE: 1250-D-500P W/(2) 25 GAL. FOAM CELLS,DELUGE 152" PUMPER RESCUE BODY,HYDRAULIC LADDER RACK

FOR: UNITED STATES AIR FORCE-USAF JORDAN PIERCE DIRECT

DWG NO.: 34001AD

JOB NO.	SCALE	DRAWN BY	CHECKED BY	SHEET SIZE	SHEET NO.
34001	1:24	BST	NPE	D	1 OF 1
	DATE	06SEP19	11SEP19		

View File Created 16-DEC-2019 12:41:11