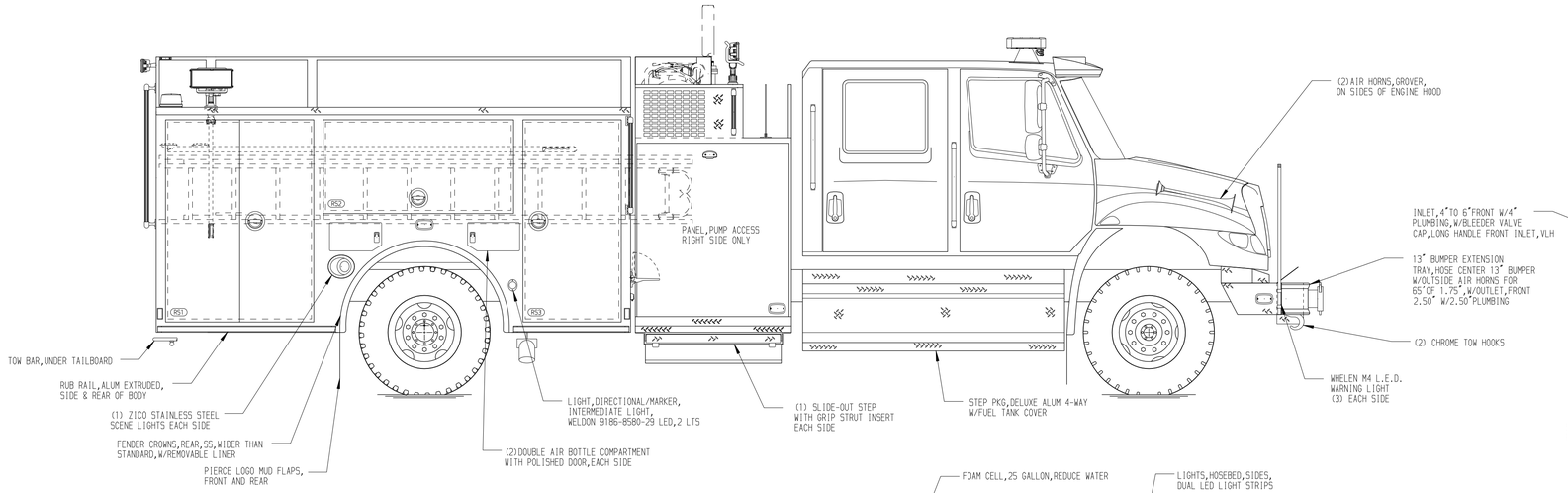

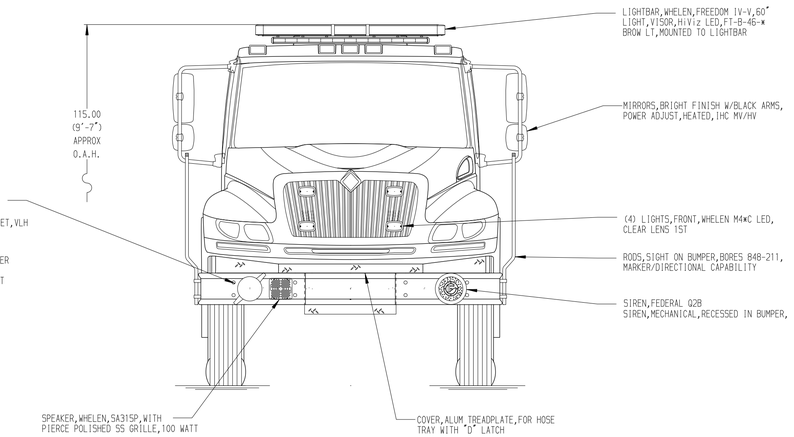

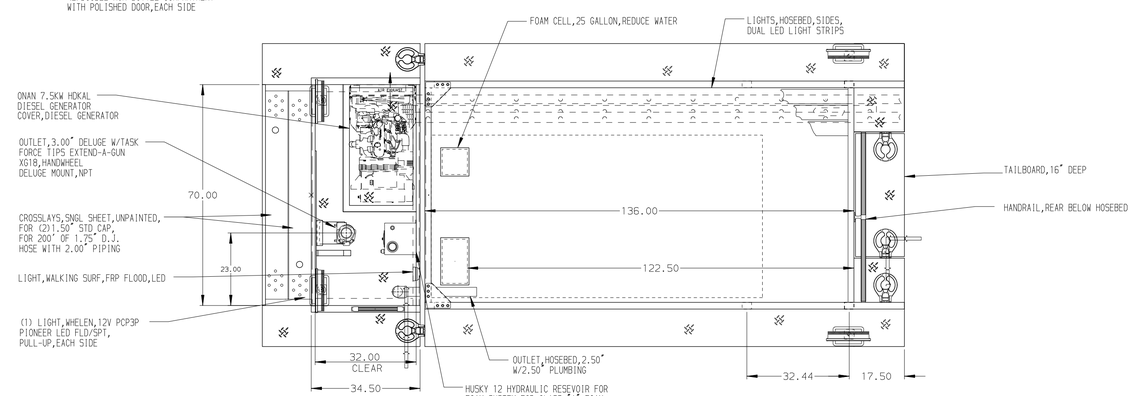

HOSEBED CAPACITIES

1. 400' OF 2.50" D. J. HOSE
2. 1200' OF 5.00" D. J. HOSE
3. 600' OF 3.00" D. J. HOSE

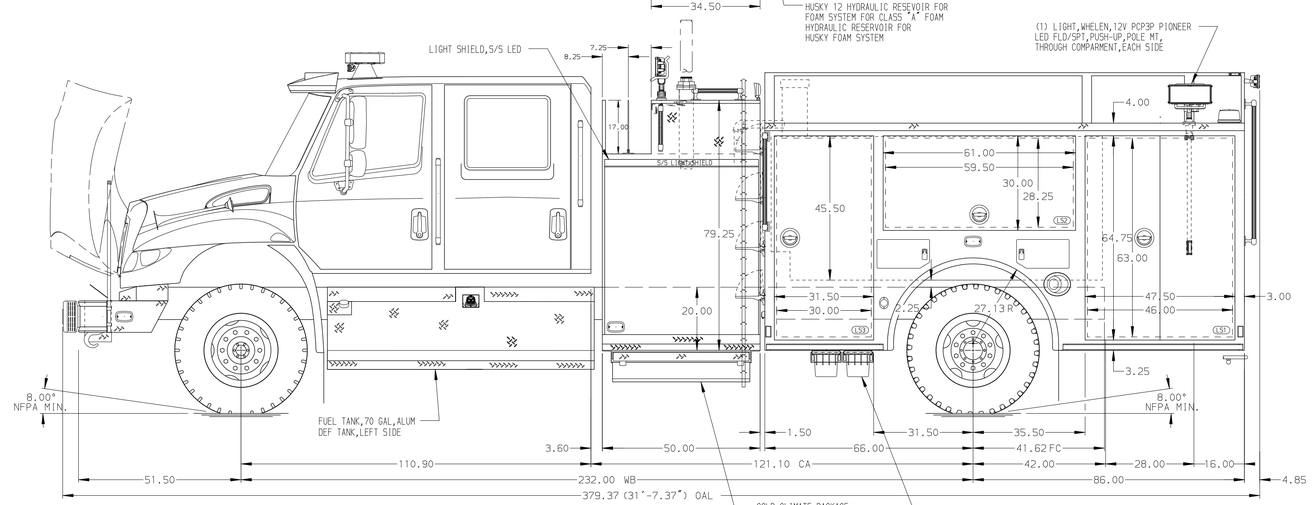

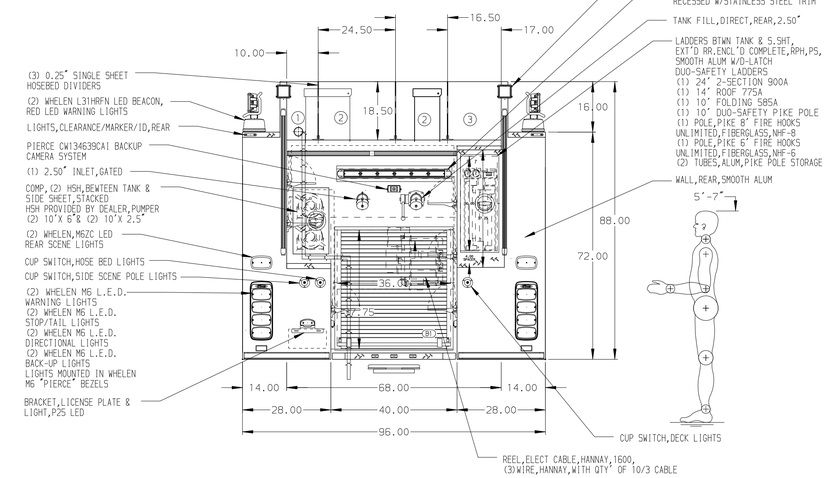

ALUMINUM BODY

MAXIMUM O.A.L. 380.00"

MAXIMUM O.A.H. 116"

NOTE

DIMENSIONS SHOWN ARE APPROXIMATE AND ARE SUBJECT TO MINOR DEVIATIONS AS MAY OCCUR OR BE NECESSARY IN CONSTRUCTION.
MINOR DETAILS NOT SHOWN.

REV	DATE	BY	CH
4	04DEC19	RHU	GSC
3	02DEC19	JLA	GSC
2	08NOV19	JLA	GSC
1	13SEP19	JLA	RWI

CHASSIS DATA
MAKE: IHC
MODEL: MV

Pierce MANUFACTURING INC.

TITLE: 1500-D-725P, 25G FOAM CELL,152"FULL HGT FRT&RR FDLER 50"SIDE CONTROL,(2)1.5"CROSSLAYS
FOR: ST.MARYS VOL. FIRE DEPARTMENT, ST.MARYS, WEST VIRGINIA
DWG NO.: 33964AD

JOB NO.	33964
SCALE	1:24
DATE	08AUG19
DRAWN BY	JLA
CHECKED BY	RWI
DATE	14AUG19
SHEET SIZE	D
SHEET NO.	1 OF 1

View File Created 05-DEC-2019 07:04:35