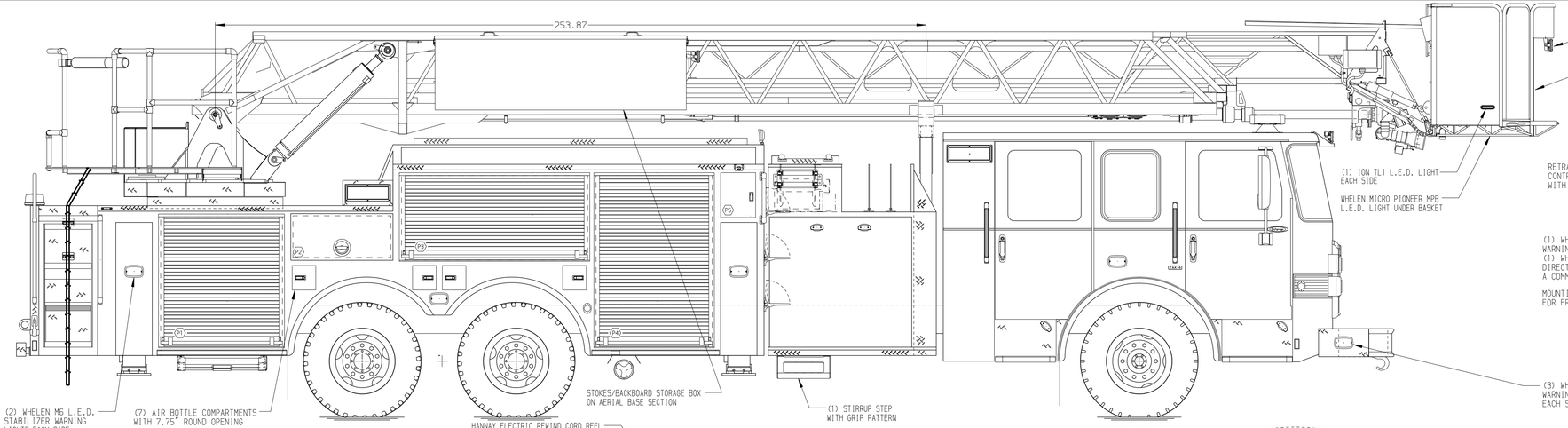

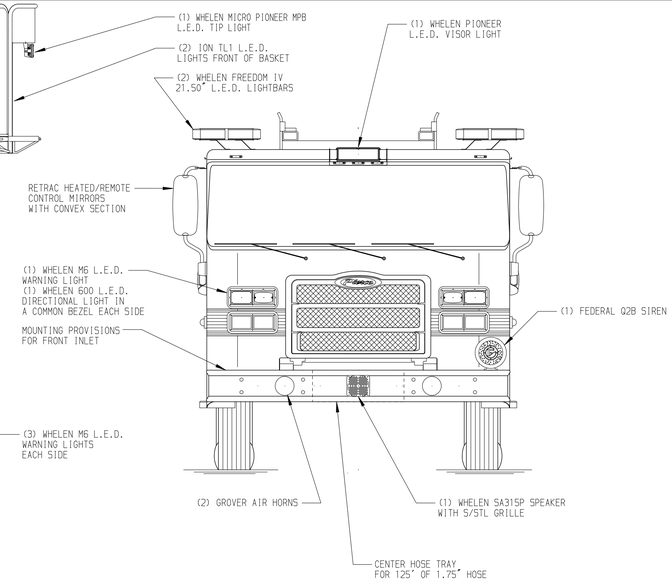

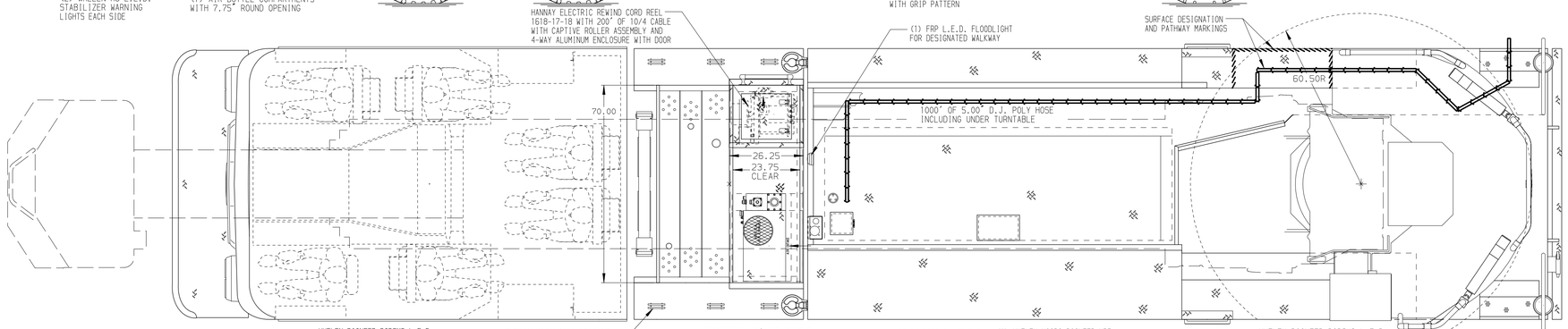

BODY	WATER TANK
110' Tandem Axle Platform Aluminum Body	500 Gallon Notched Poly Water Tank
COMPT,DRIVER SIDE FRONT	Foam System
FH/FD Rollup w/o Chute	Plumbing for Future Husky Foam System
COMPT,DRIVER SIDE REAR	Foam Cell
FH/FD Rollup and Lift-up rearward	20 Gallon Foam Cell, Non-Reduced Water
COMPT,PASSENGER SIDE FRONT	
Full Height Rollup Forward	
COMPT,PASSENGER SIDE REAR	
Full Height Rollup and Liftup Rearward	

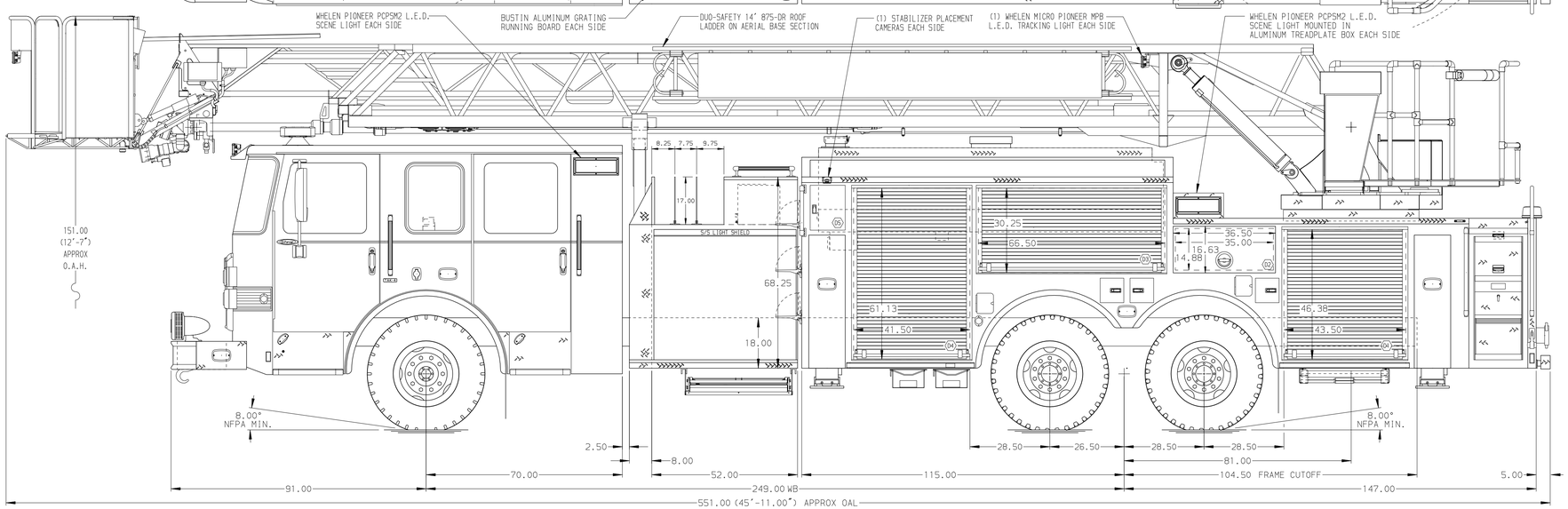

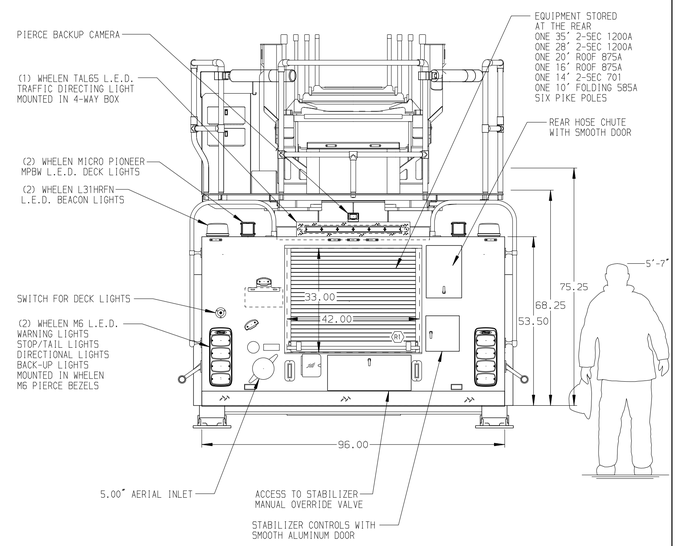

CHASSIS	CAB	AXLE,FRONT,CUSTOM	TRANSMISSION	PUMPHOUSE	CROSSLAYS,1.50"	SPEEDLAYS	SAFETY
Enforcer Chassis	7000 Enforcer Cab	22,800 Lb TAK-4 Axle	ALlison 5th Gen, 4500 EVS P	52" Control Zone Side Mount	(2) 1.50" Standard Capacity	Speedlays Not Required	Side Roll and Frontal Impact Protection
ENGINE	BUMPER	AXLE,REAR		PUMP	CROSSLAYS,2.50"	GENERATOR	
525 HP DD13 Engine	22" Extended Stainless Steel	44,000 Lb Meritor Axle		2000 GPM Waterous CSU	(1) 2.50" Standard Capacity	Harrison 6kW MSV, Hydraulic	

CUSTOMER APPROVAL

APPROVED BY: _____

DATE: _____

Pierce MANUFACTURING INC.

NOTE

DIMENSIONS SHOWN ARE APPROXIMATE AND ARE SUBJECT TO MINOR DEVIATIONS AS MAY OCCUR OR BE NECESSARY IN CONSTRUCTION.
MINOR DETAILS NOT SHOWN.

1. 35.00" LIMITED RETRACTION REQUIRED
2. ONE 1.50 OUTLET WITH 2.00 PIPING AND SWIVEL LOCATED IN CENTER BUMPER TRAY
3. SHORELINE RECEPTACLE WITH KUSSMAUL SUPER AUTO-EJECT LOCATED ON DRIVER SIDE OF THE CAB
4. AIR INLET WITH DISCONNECT COUPLING IN THE DRIVER SIDE STEPWELL
5. BATTERY CHARGER LOCATED BEHIND DRIVER SEAT
6. BATTERY CHARGER INDICATOR BEHIND DRIVER'S SEAT DISPLAYED THROUGH WINDOW
7. FIVE ADJUSTABLE SHELVES IN COMPARTMENTS PER SHOP ORDER
8. FOUR FLOOR MOUNTED SLIDE-OUT TRAYS IN COMPARTMENTS PER SHOP ORDER
9. ONE SWING-OUT TOOL BOARD WITH PEGBOARD PATTERN IN COMPARTMENT PER SHOP ORDER
10. CIRCUIT BREAKER PANEL LOCATED IN COMPARTMENT PER SHOP ORDER
11. 3.00" RAISED AERIAL PEDESTAL
12. 1250 GPM HIGH FLOW WATERWAY

REV	DATE	BY	CH
-	-	-	-

CHASSIS DATA

MAKE: PIERCE

MODEL: ENFORCER

TITLE	110' ASCENDANT AERIAL PLATFORM AND BODY ASSEMBLY –
FOR	PIERCE FIELD UNIT APPLETON, WISCONSIN
DWG NO.	32034AD

JOB NO.	32034
SCALE	1:24
DATE	
DRAWN BY	TKA 200CT17
CHECKED BY	GRM 260CT17
SHEET SIZE	D
SHEET NO.	1 OF 1

View File Created 27-OCT-2017 07:18:51